Комод Прага
Prague Chest of Drawers
97x195x39

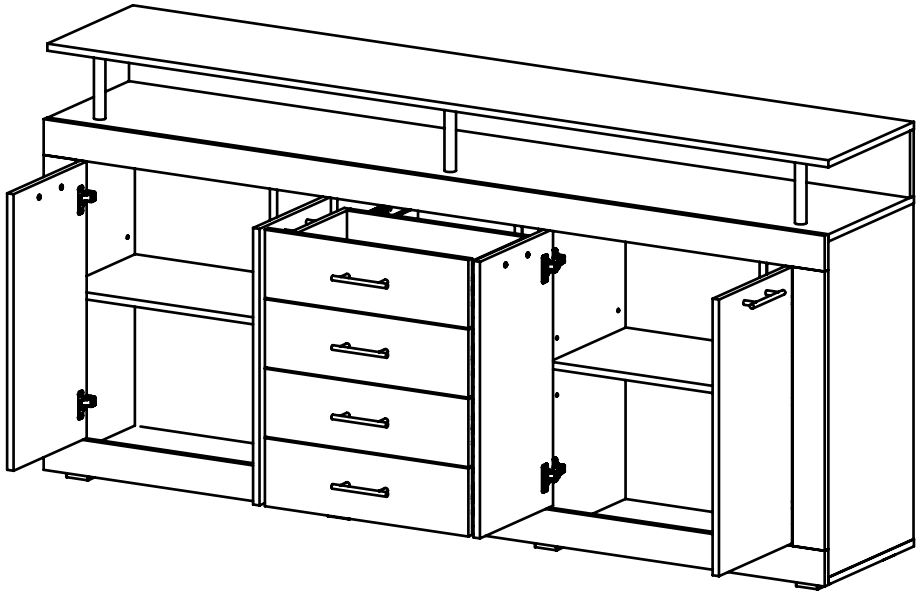

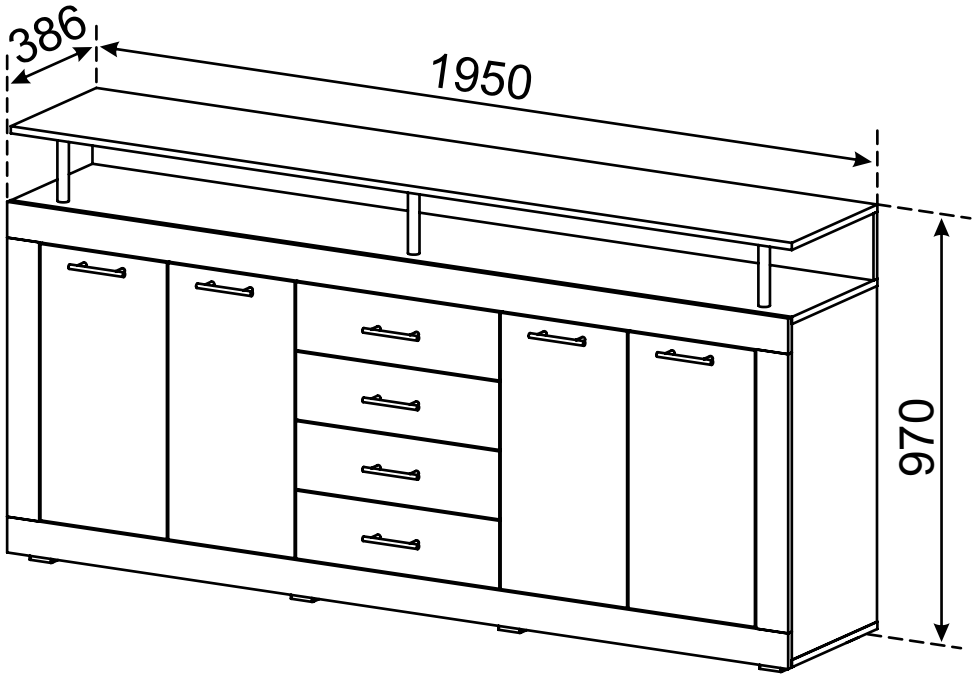

garant-nv.com

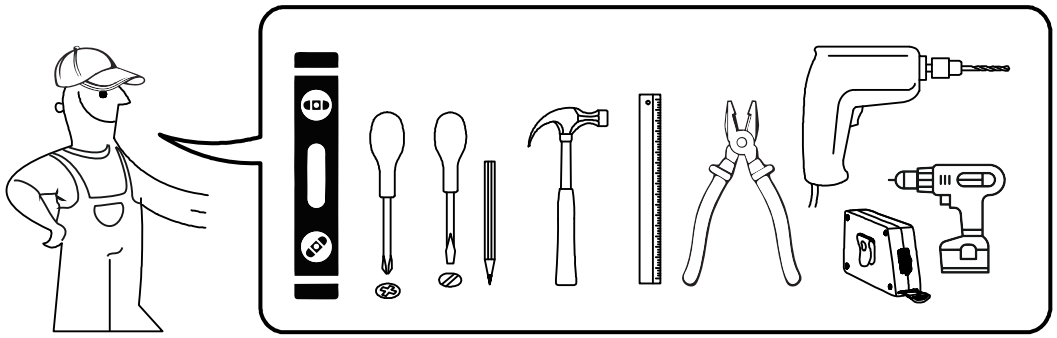

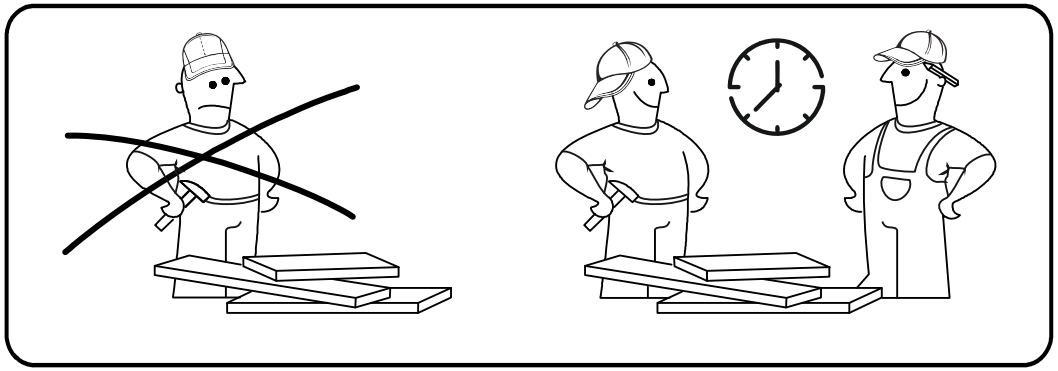

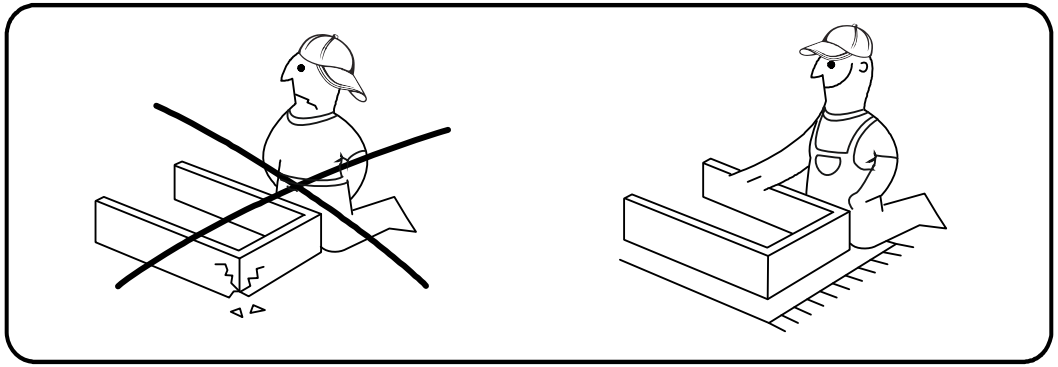

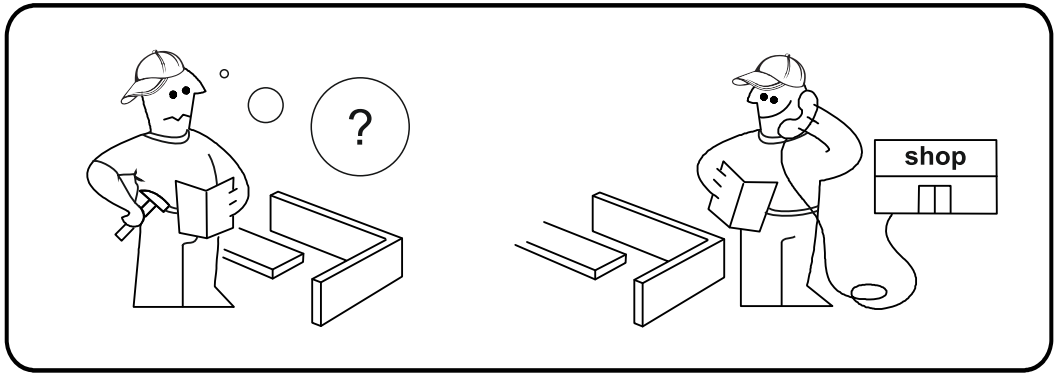
?
shop

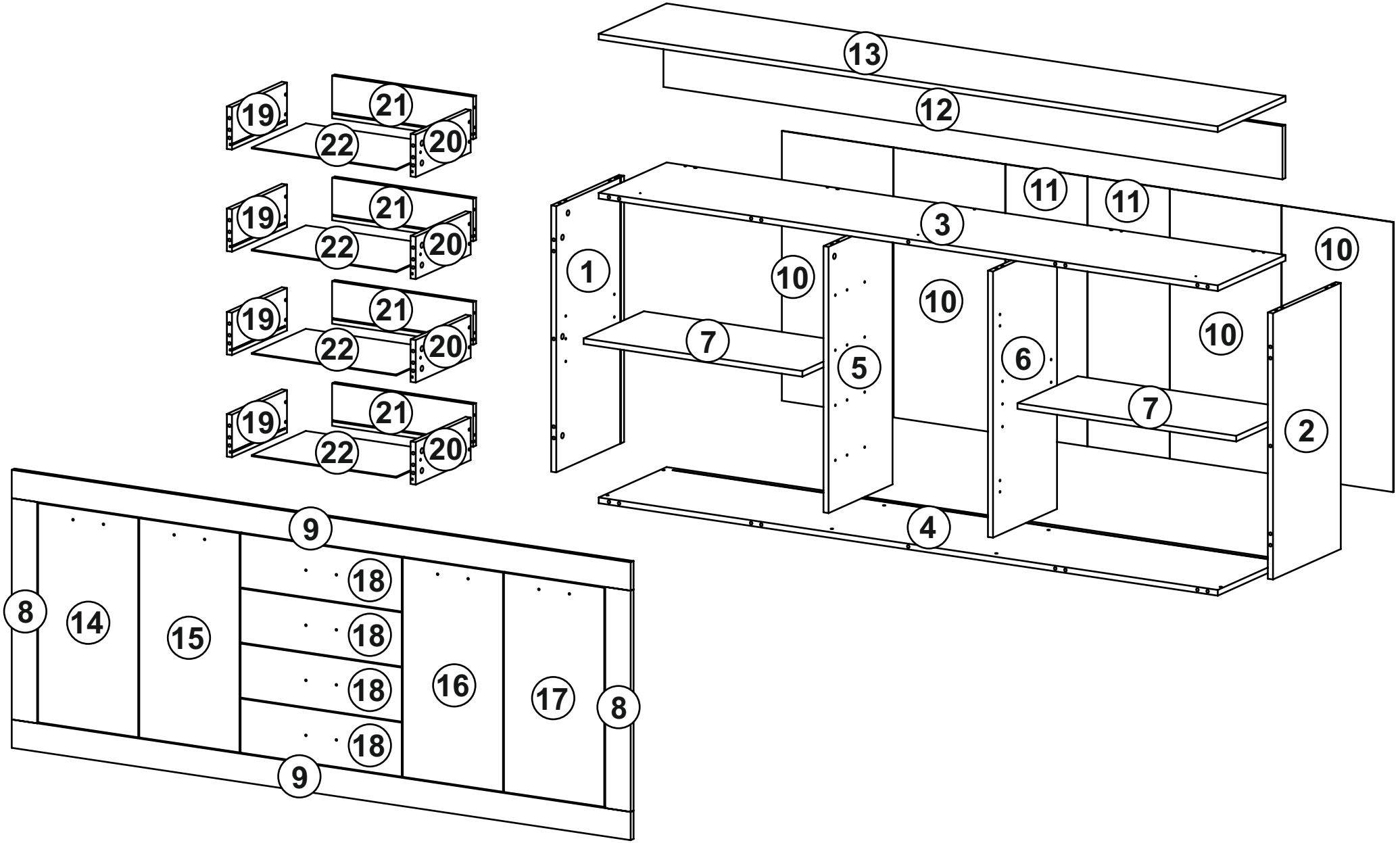
13
12
11
11
3
10
1
10
10
10
7
5
6
7
2
4
9
18
18
18
18
8
14
15
16
17
8
9
19
21
22
20
19
21
22
20
19
21
22
20
19
21
22
20

A 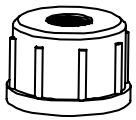 x6	B 4x25  x16	C 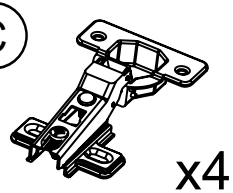 x4	D 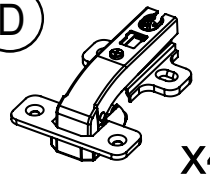 x4
E 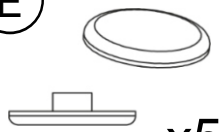 x50	F 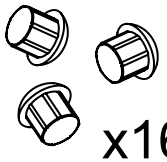 x16	G 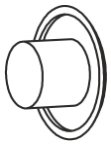 x20	H 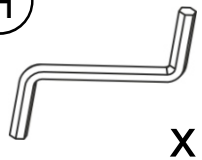 x1
I 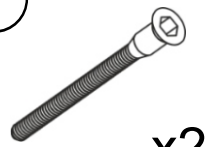 x24	J 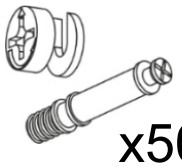 x50	K L-300  x4	L 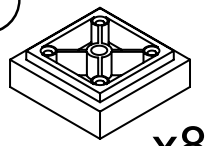 x8
M 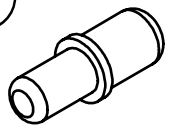 x8	N 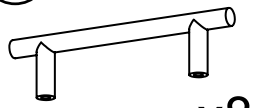 x8	O 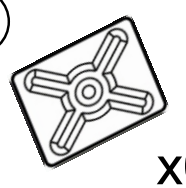 x6	P 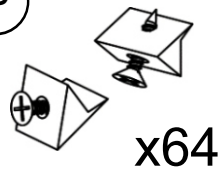 x64
Q 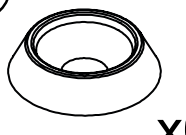 x6	R 8x35 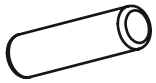 x36	S 8x60 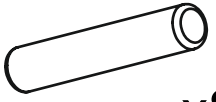 x8	T 3,5x16  x38
U 4x30 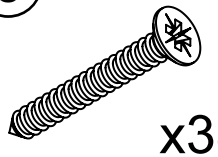 x38	V 6,3x13 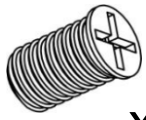 x40	W L-752  x3	X L-150 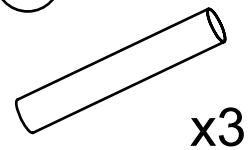 x3
Y  x1			

№	A x B x C	x	Package
1	752x370x16	1	2
2	752x370x16	1	2
3	1950x370x16	1	3
4	1950x370x16	1	3
5	752x349x16	1	2
6	752x349x16	1	2
7	689x349x16	2	2
8	80x625x16	2	2
9	1950x80x16	2	3
10	351x762x3	4	2
11	258x762x3	2	2
12	1950x150x16	1	3
13	1950x370x16	1	3
14	316x619x16	1	1
15	316x619x16	1	1
16	316x619x16	1	1
17	316x619x16	1	1
18	508x153x16	4	1
19	300x120x16	4	1
20	300x120x16	4	1
21	445x120x16	4	1
22	294x455x3	4	2
		1	1

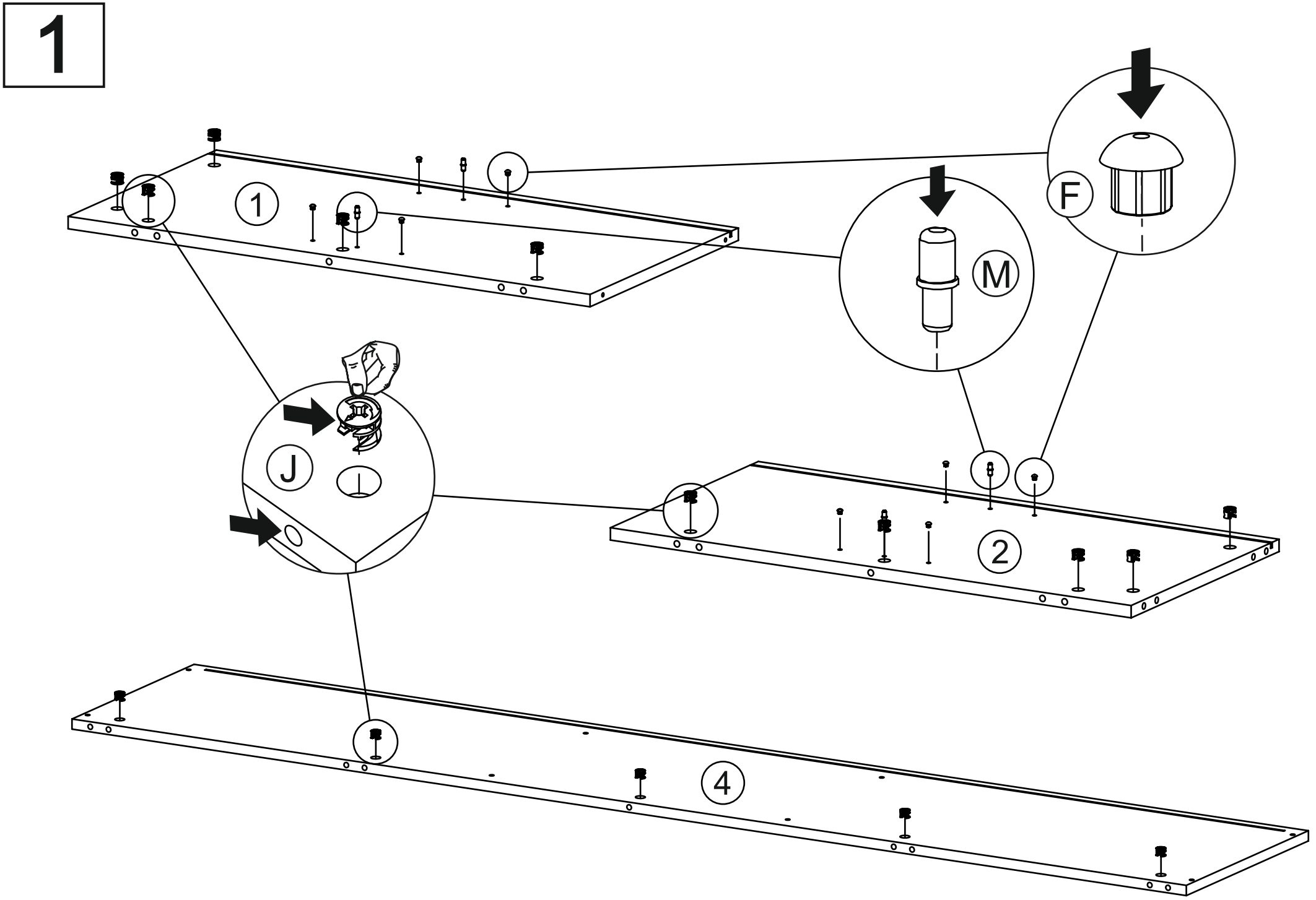
1
1
F
M
J
2
4

2

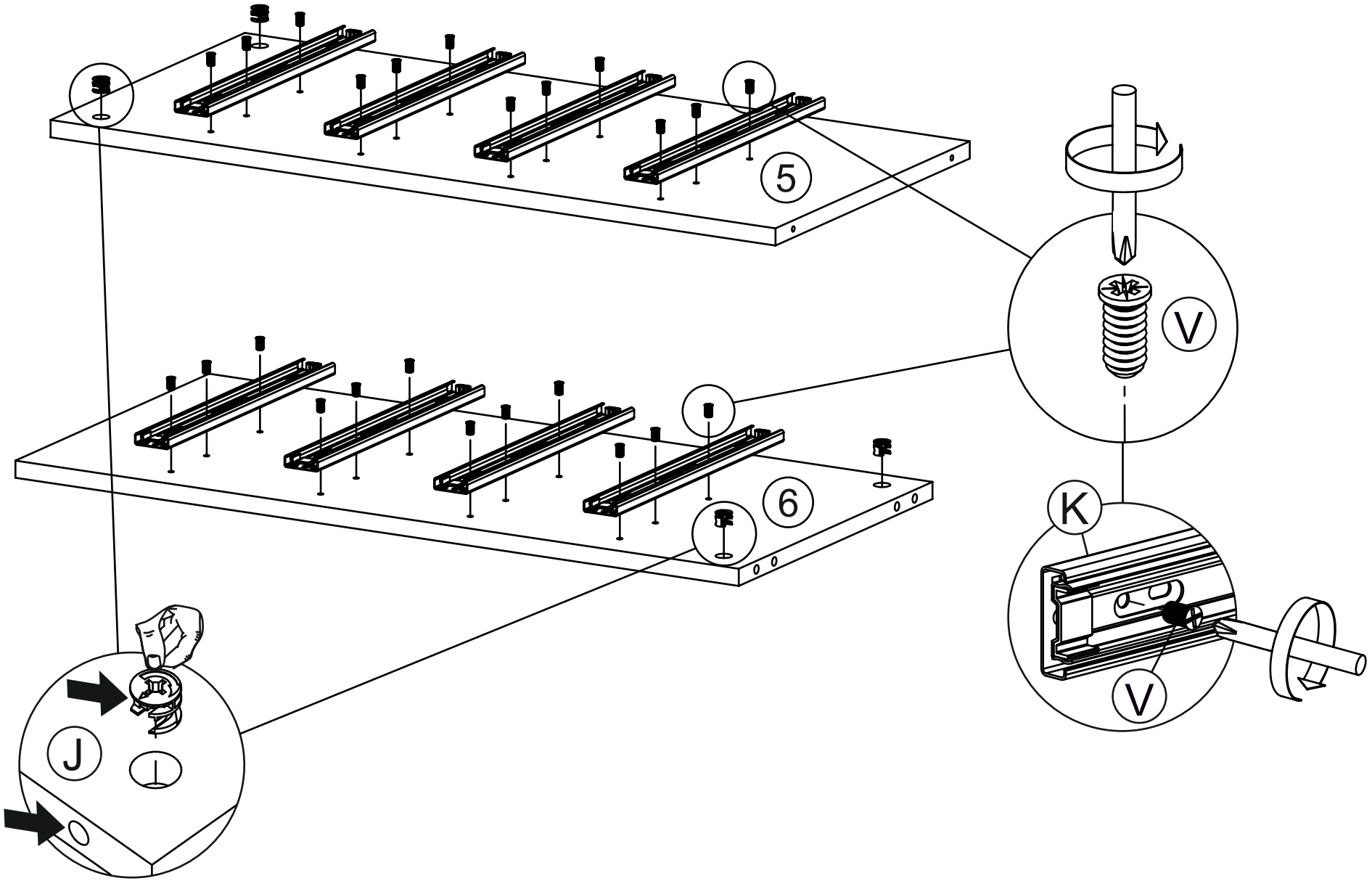

3

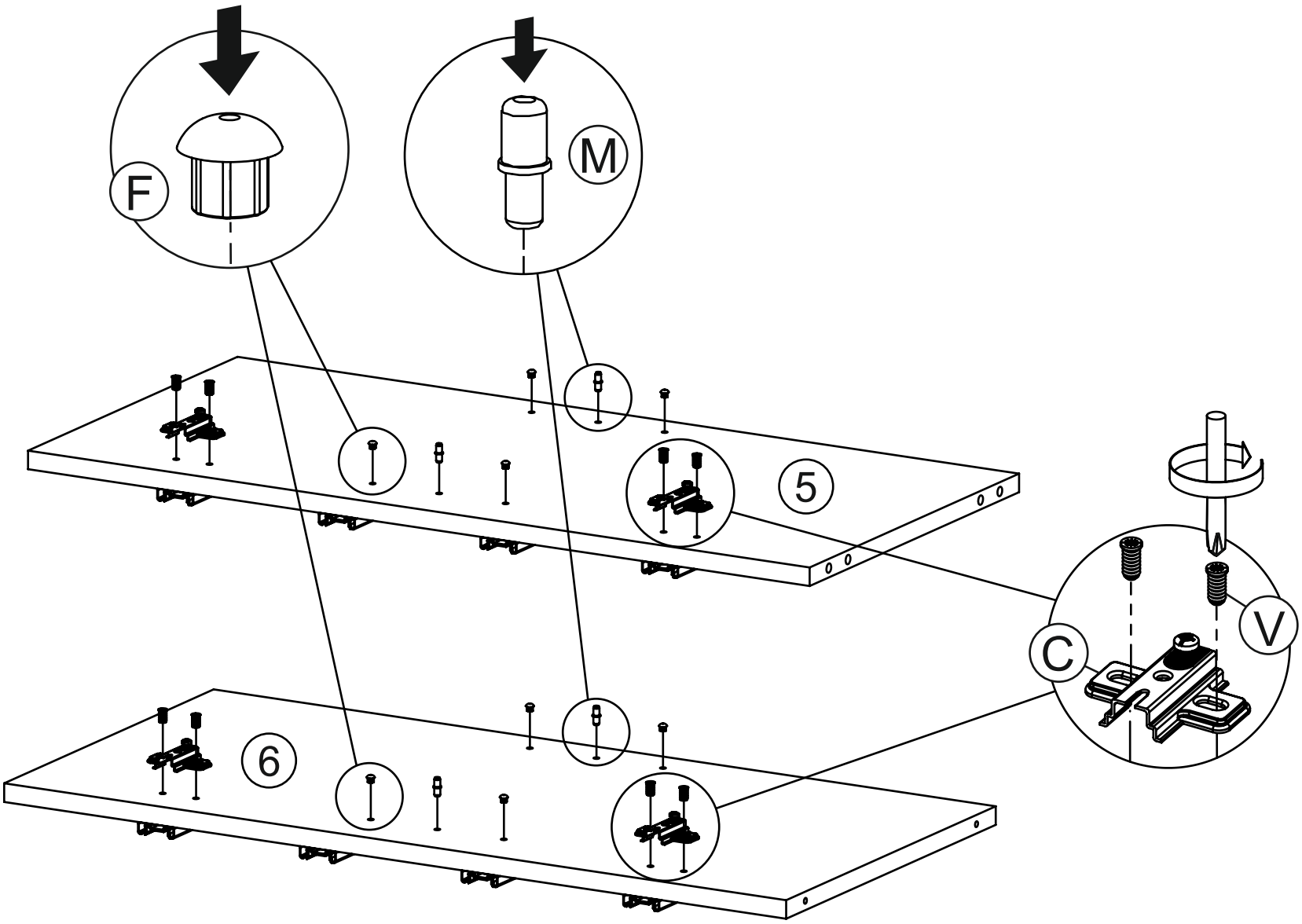

4

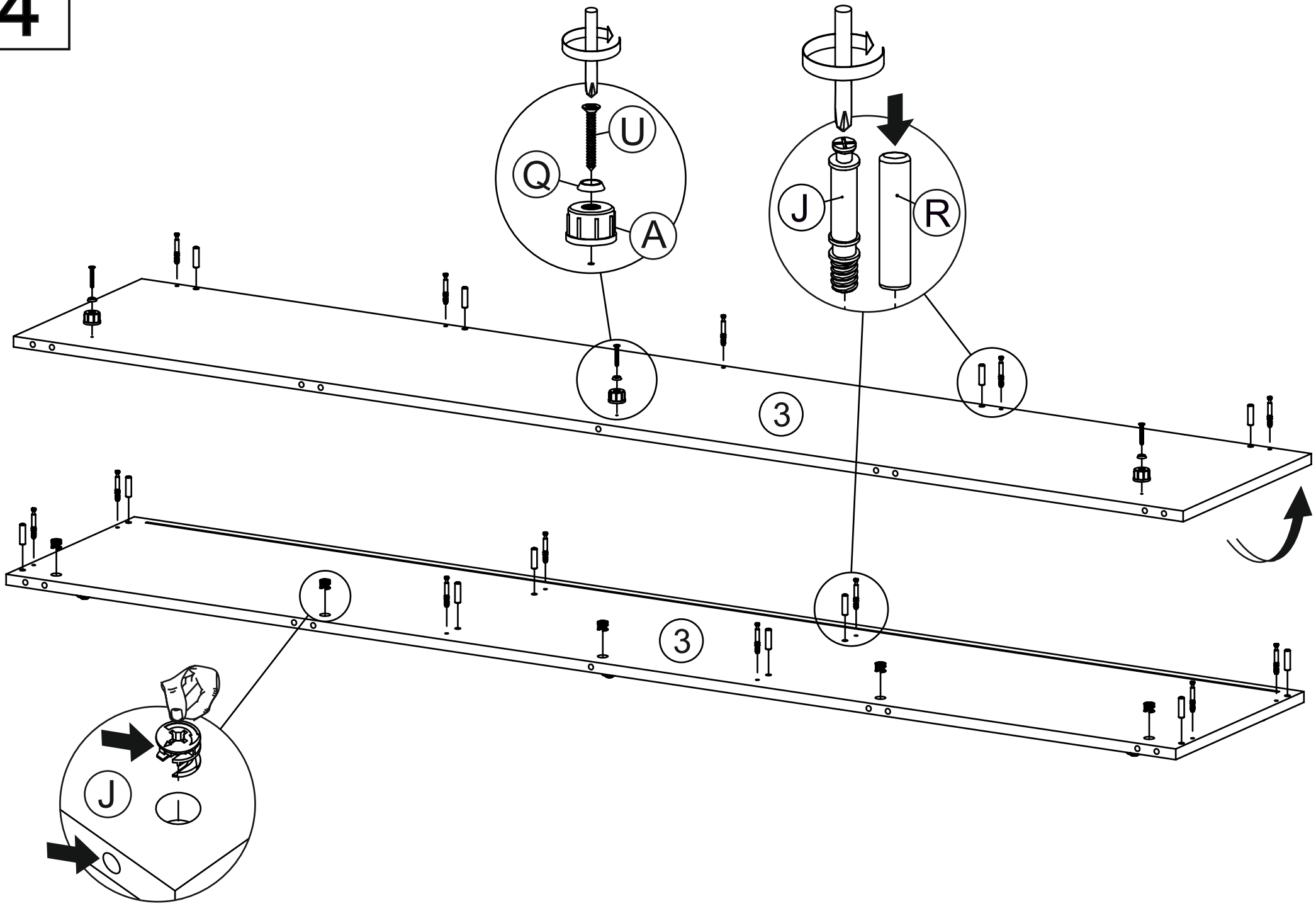

5

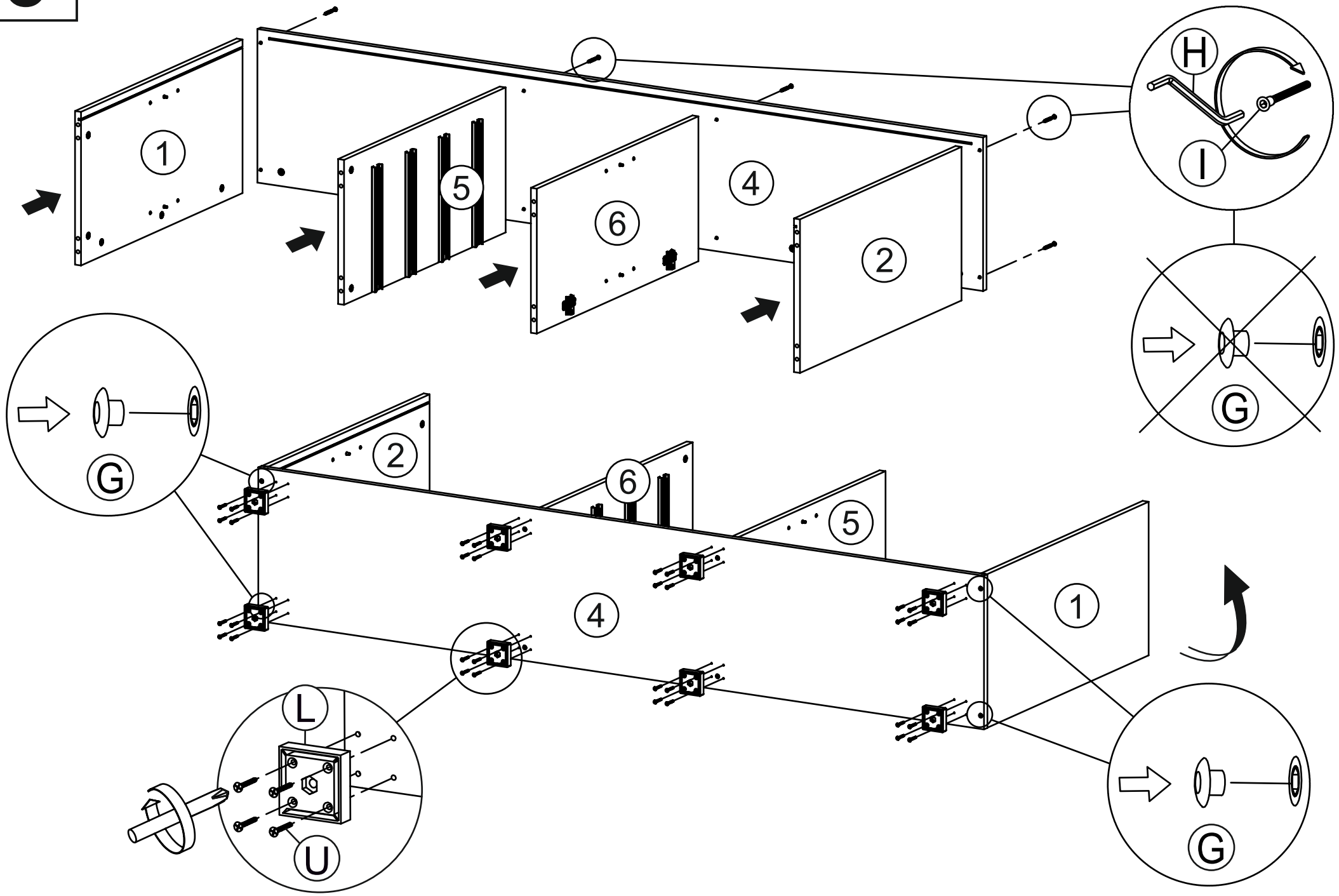

6

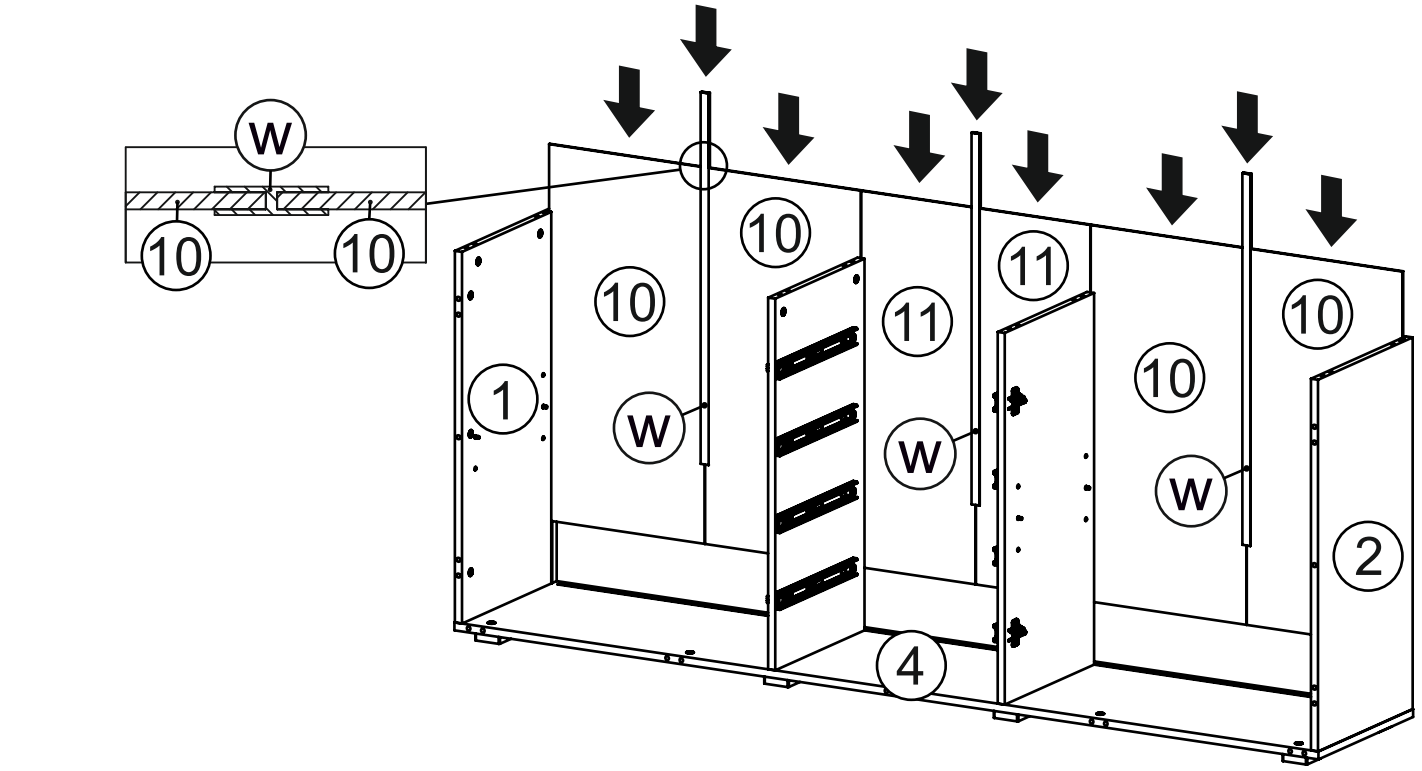

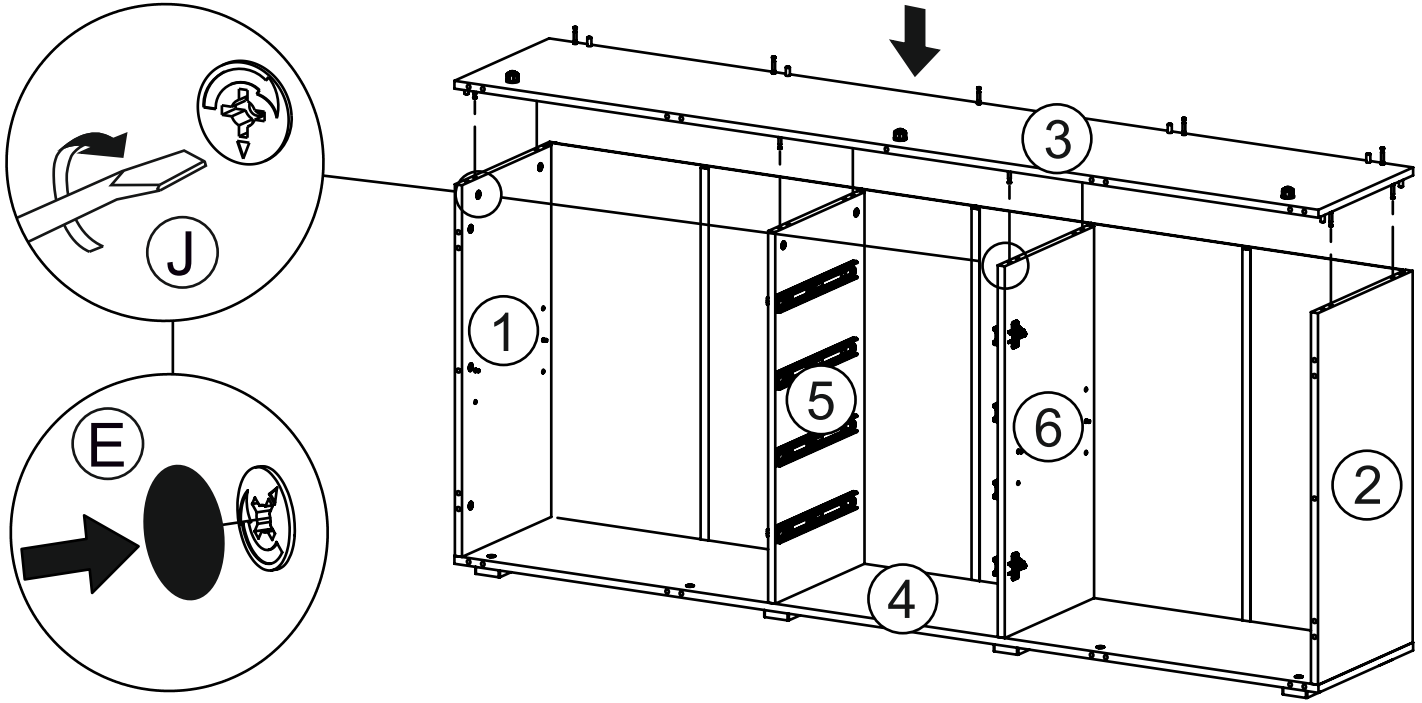

7

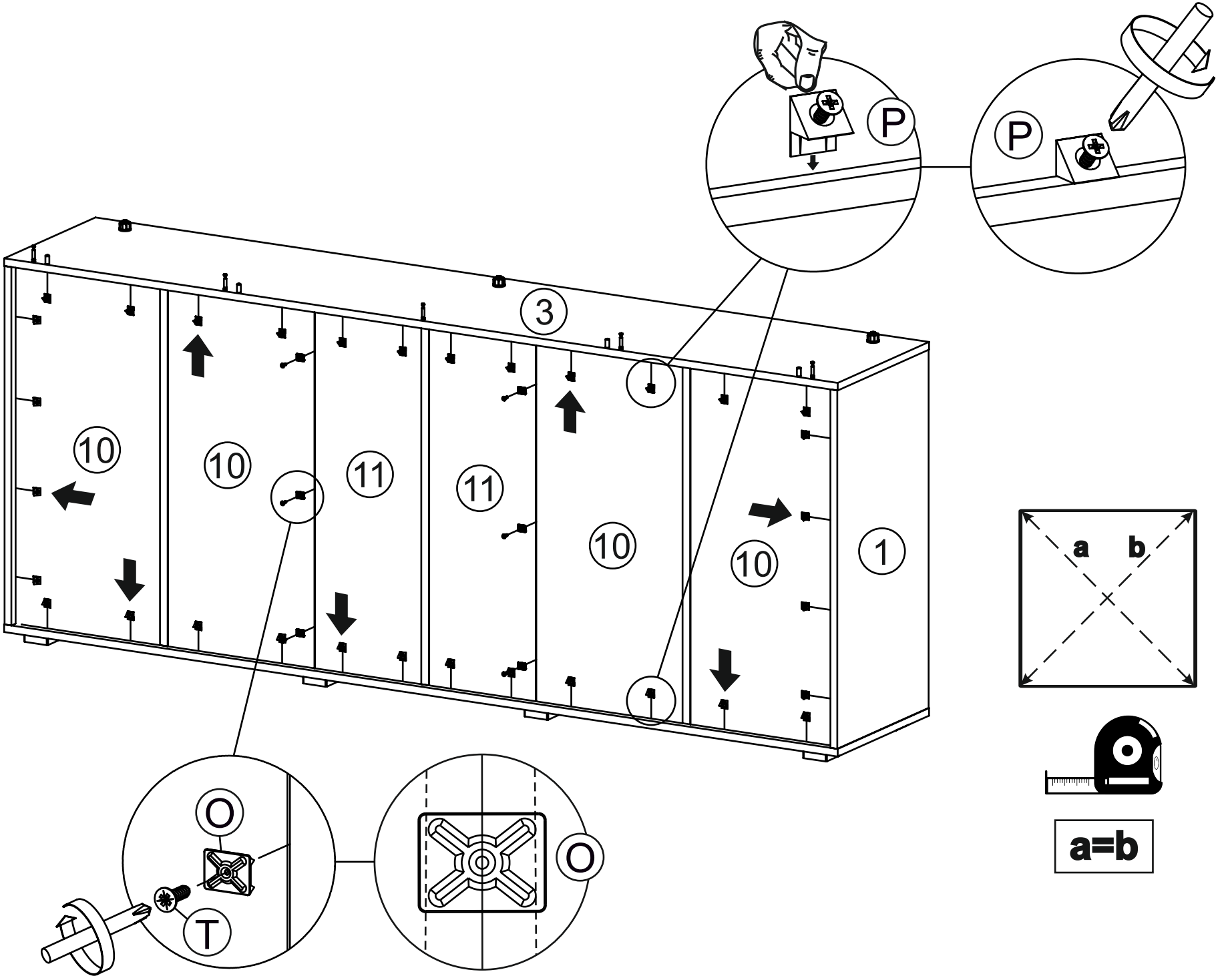

8

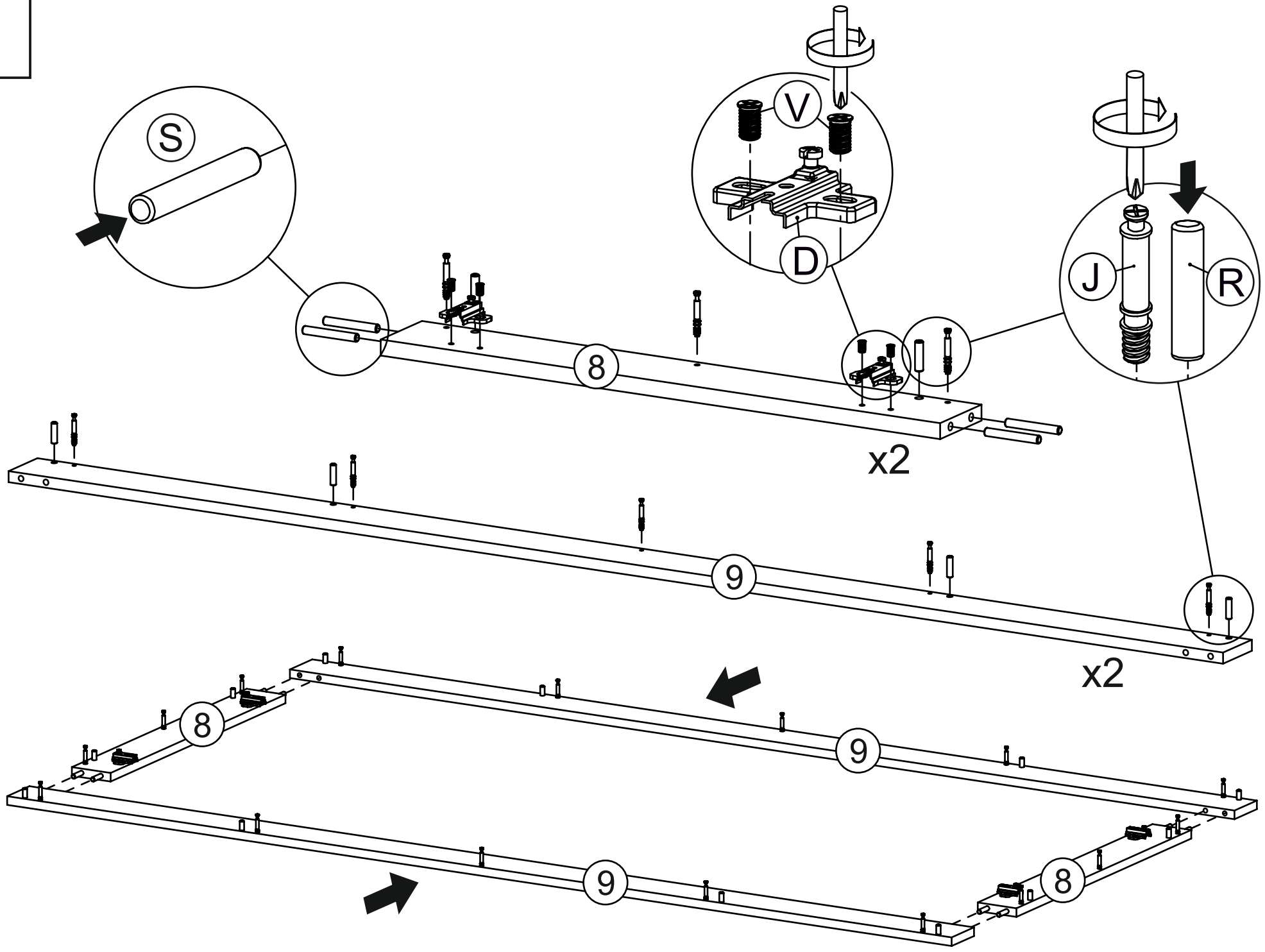

9

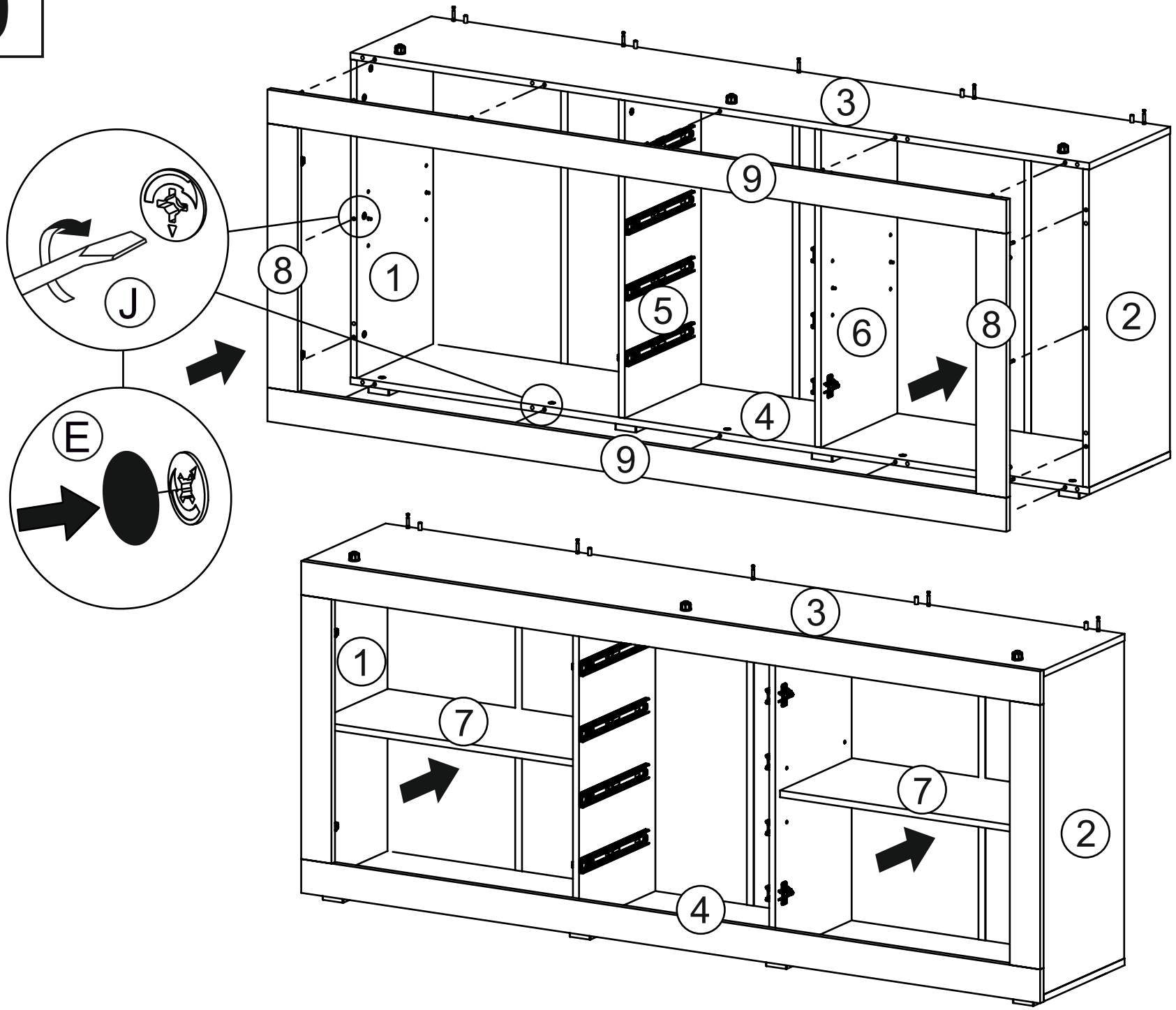

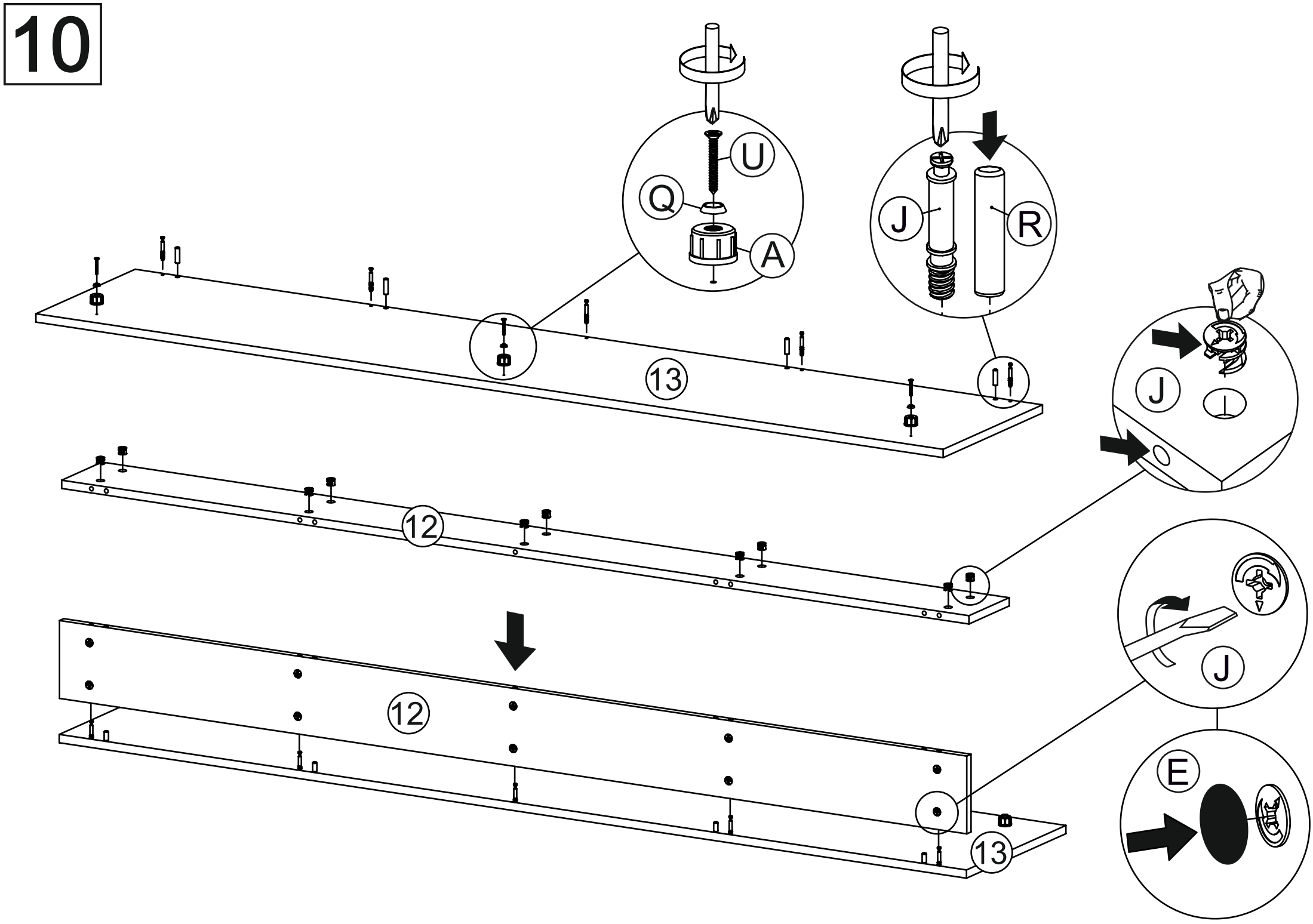
10
U
Q
A
J
R
13
J
12
12
J
E
13

11

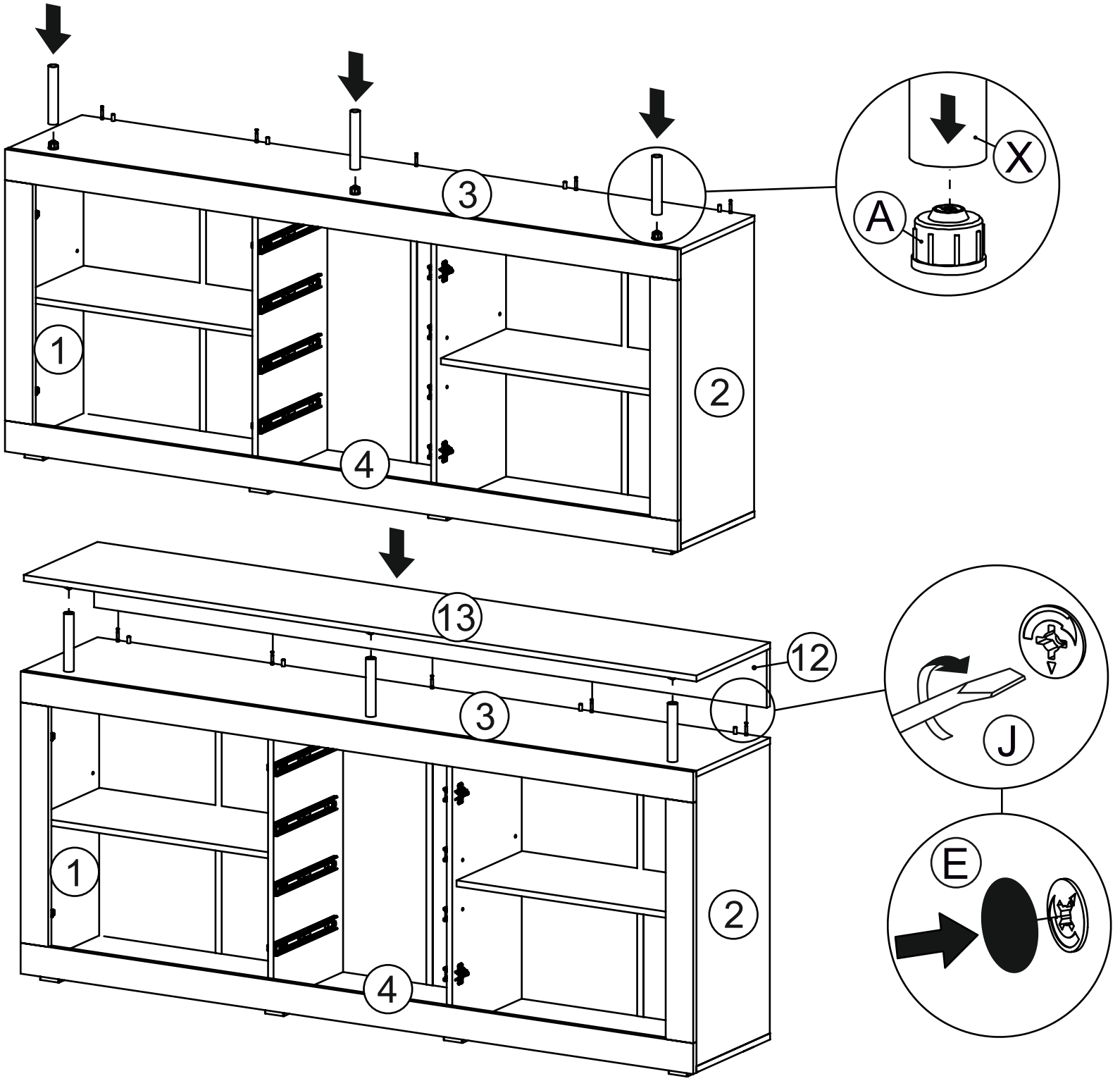

12

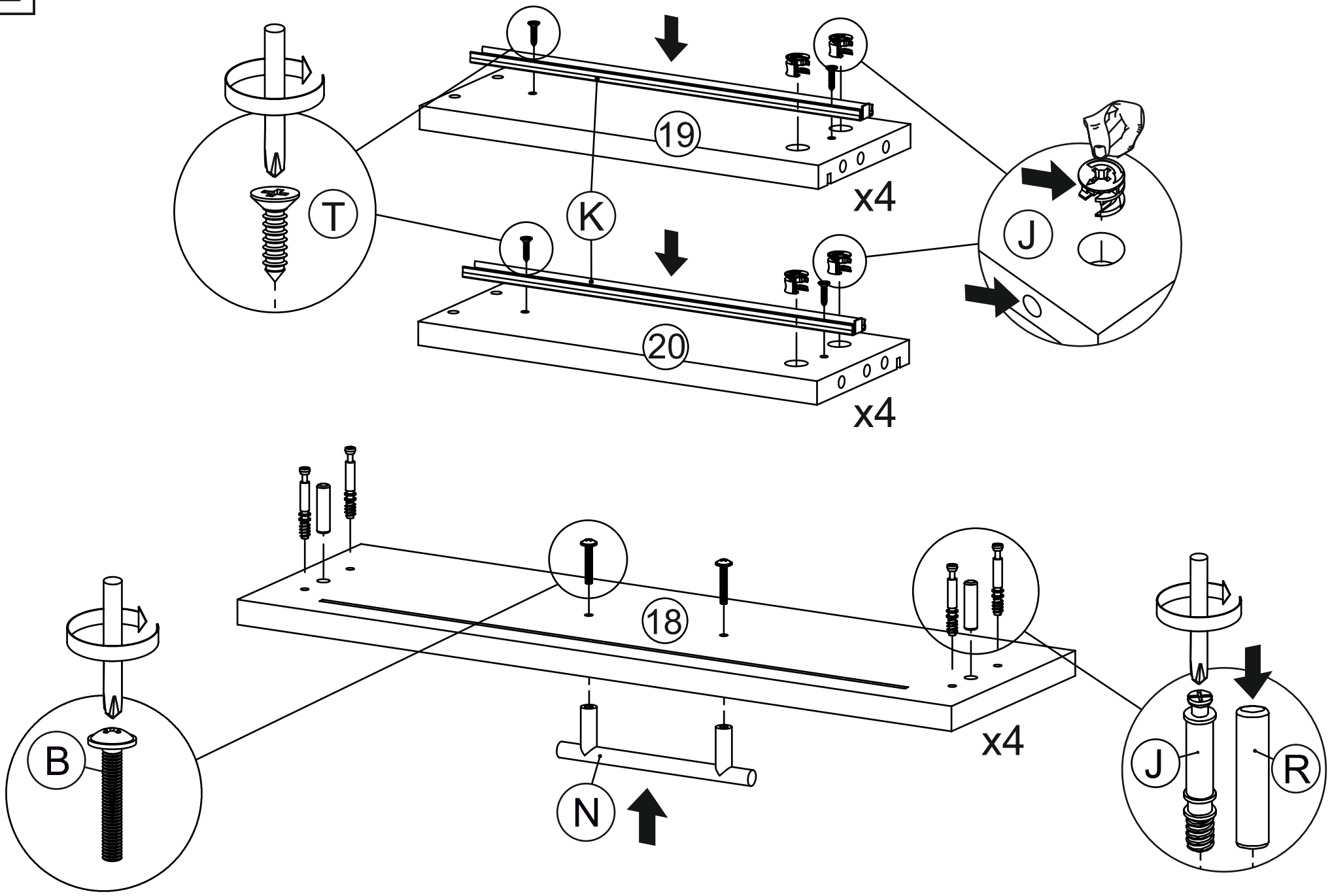

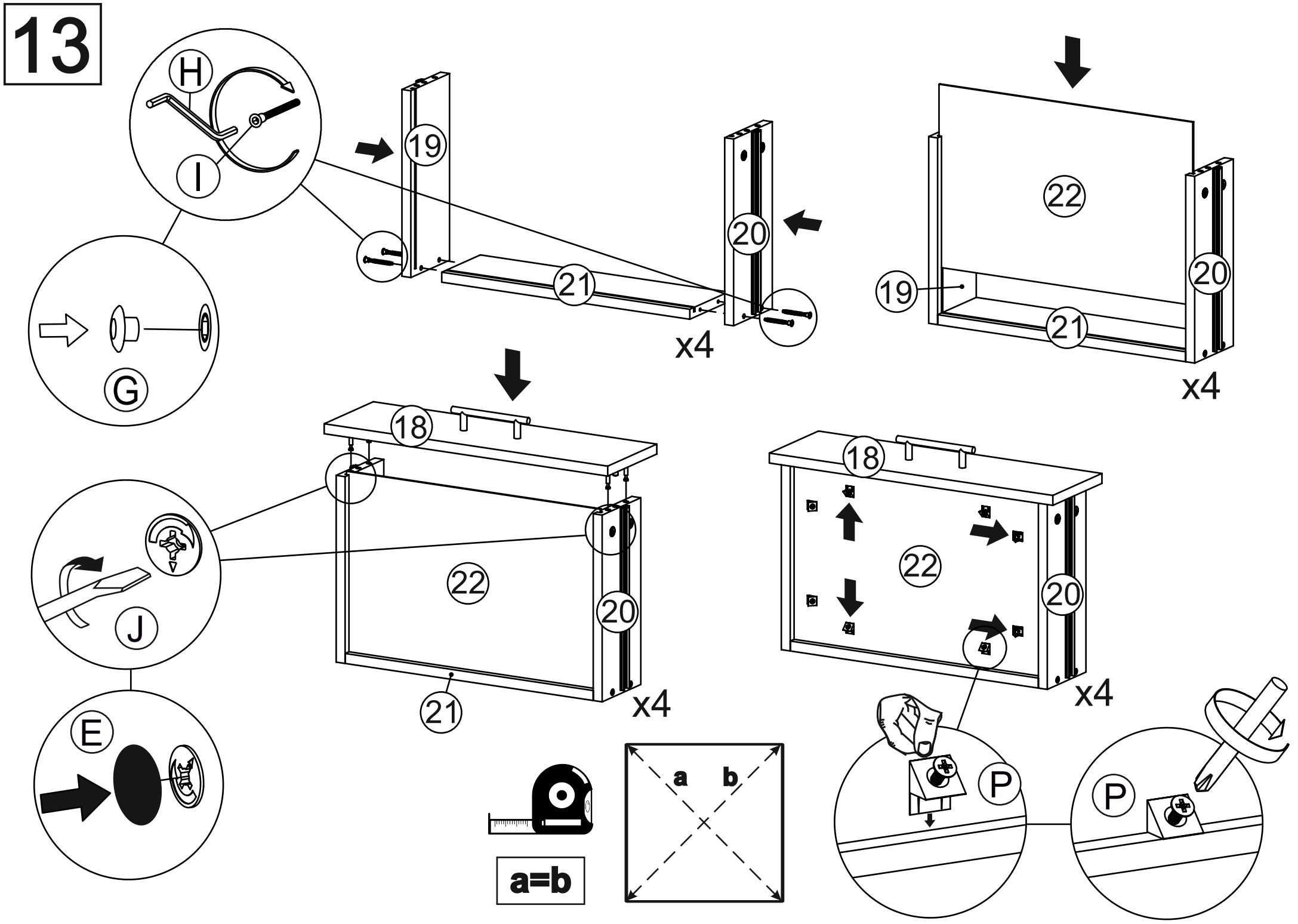
13
H
I
G
19
21
20
x4
22
19
21
20
x4
18
22
20
21
x4
J
E
18
22
20
x4
P
P
a=b
a
b

14

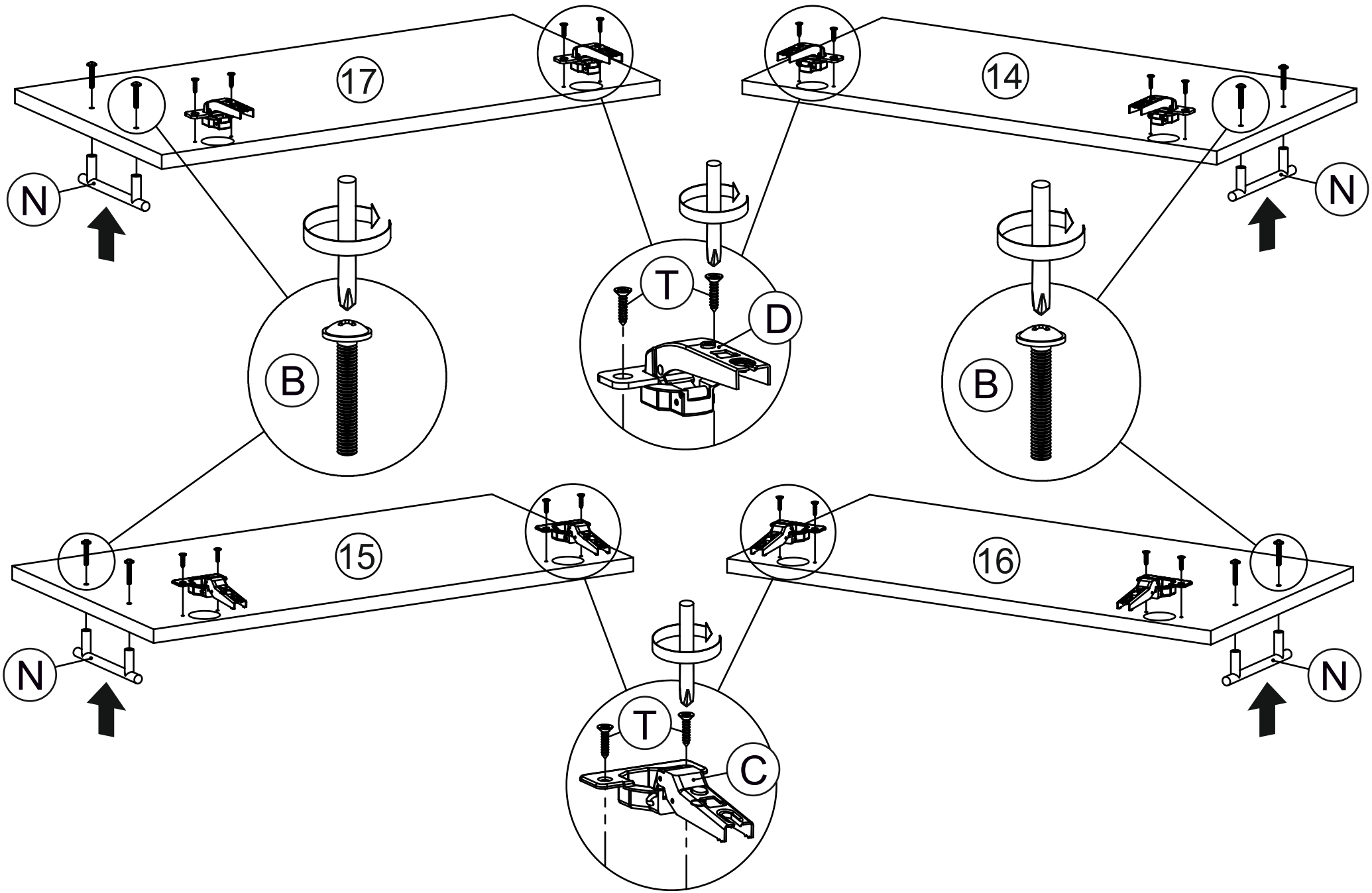

15

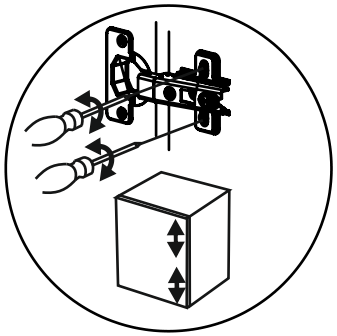

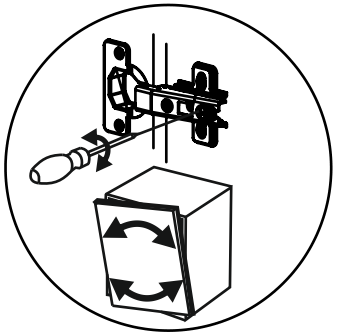

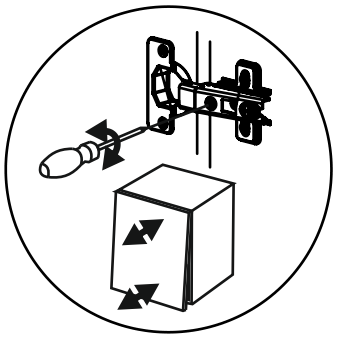

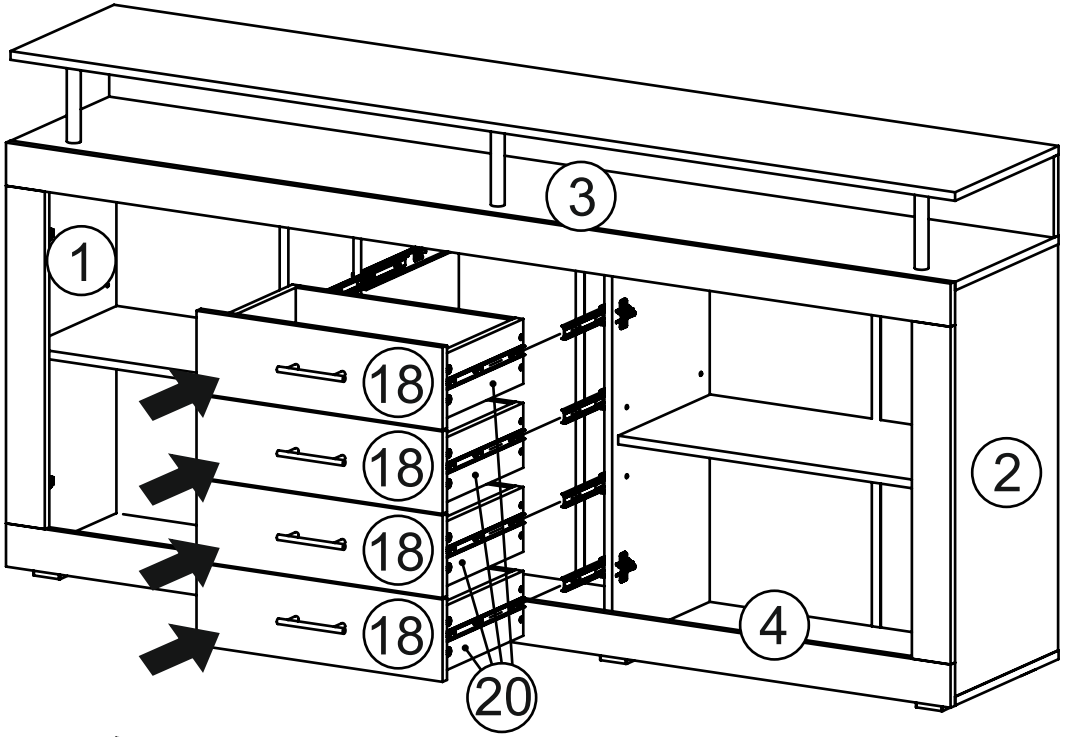

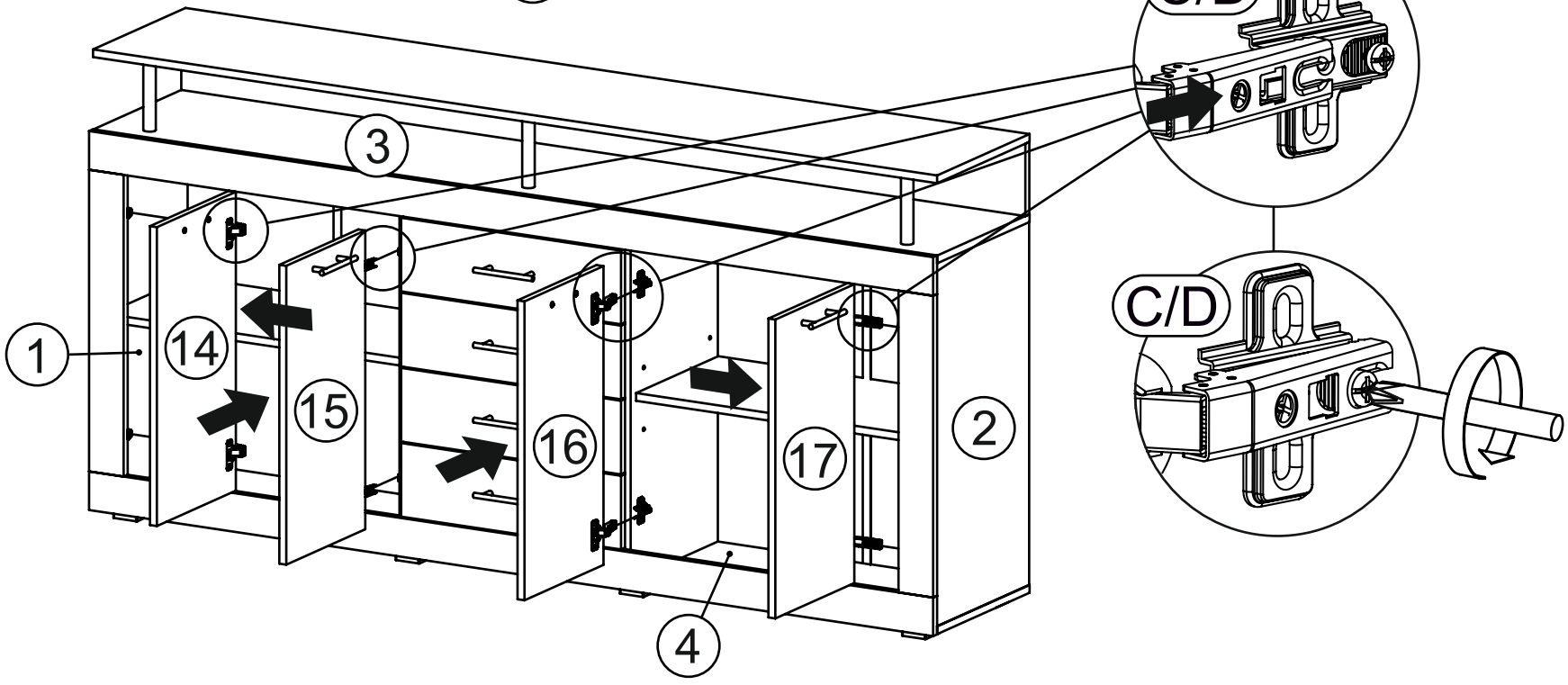

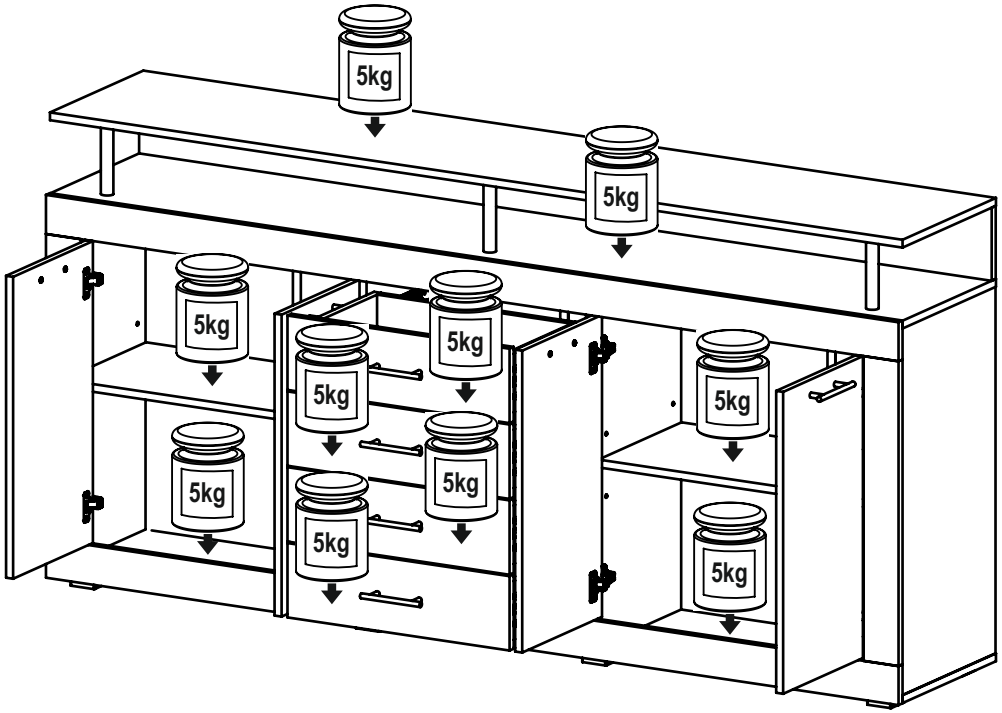
5kg
5kg
5kg
5kg
5kg
5kg
5kg
5kg
5kg
5kg

