A S228-REG1W2S/20/7 GERMAN

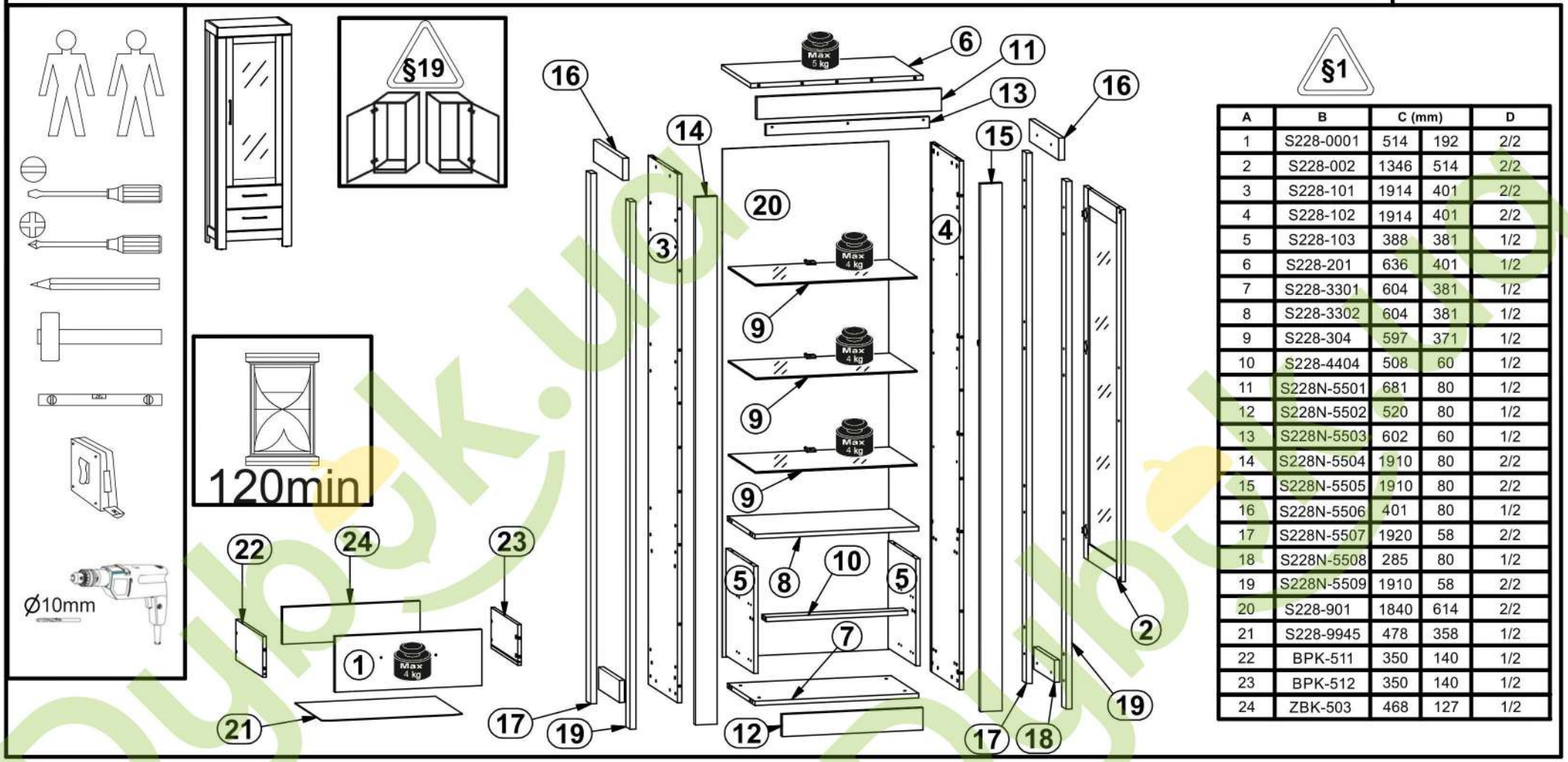

A	B	C (mm)		D
1	S228-0001	514	192	2/2
2	S228-002	1346	514	2/2
3	S228-101	1914	401	2/2
4	S228-102	1914	401	2/2
5	S228-103	388	381	1/2
6	S228-201	636	401	1/2
7	S228-3301	604	381	1/2
8	S228-3302	604	381	1/2
9	S228-304	597	371	1/2
10	S228-4404	508	60	1/2
11	S228N-5501	681	80	1/2
12	S228N-5502	520	80	1/2
13	S228N-5503	602	60	1/2
14	S228N-5504	1910	80	2/2
15	S228N-5505	1910	80	2/2
16	S228N-5506	401	80	1/2
17	S228N-5507	1920	58	2/2
18	S228N-5508	285	80	1/2
19	S228N-5509	1910	58	2/2
20	S228-901	1840	614	2/2
21	S228-9945	478	358	1/2
22	BPK-511	350	140	1/2
23	BPK-512	350	140	1/2
24	ZBK-503	468	127	1/2



Dubok.ua Dubok.ua

A

S228-REG1W2S/20/7

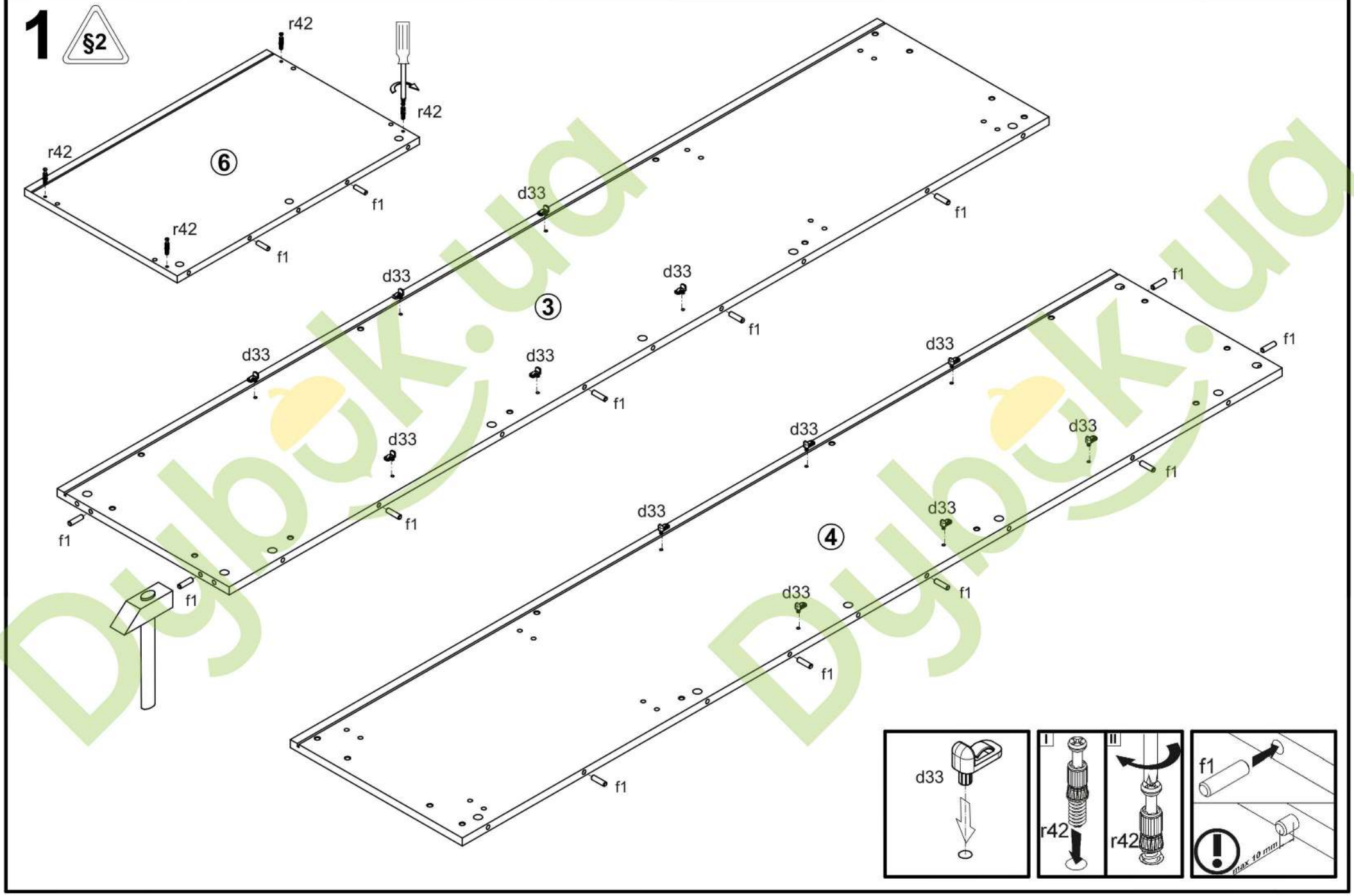

Dubok.ua

A S228-REG1W2S/20/7

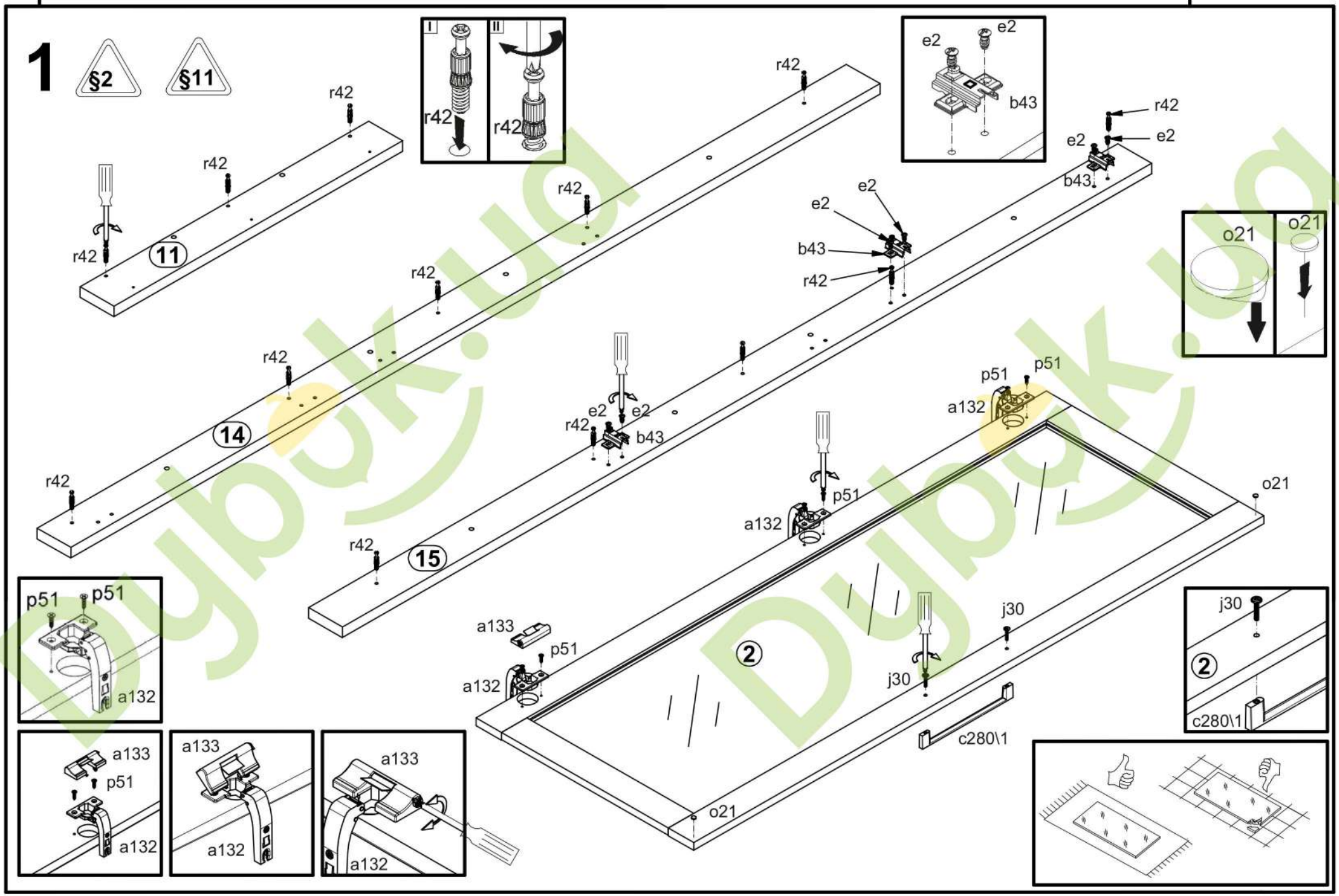

Dujok.ua

A

S228-REG1W2S/20/7

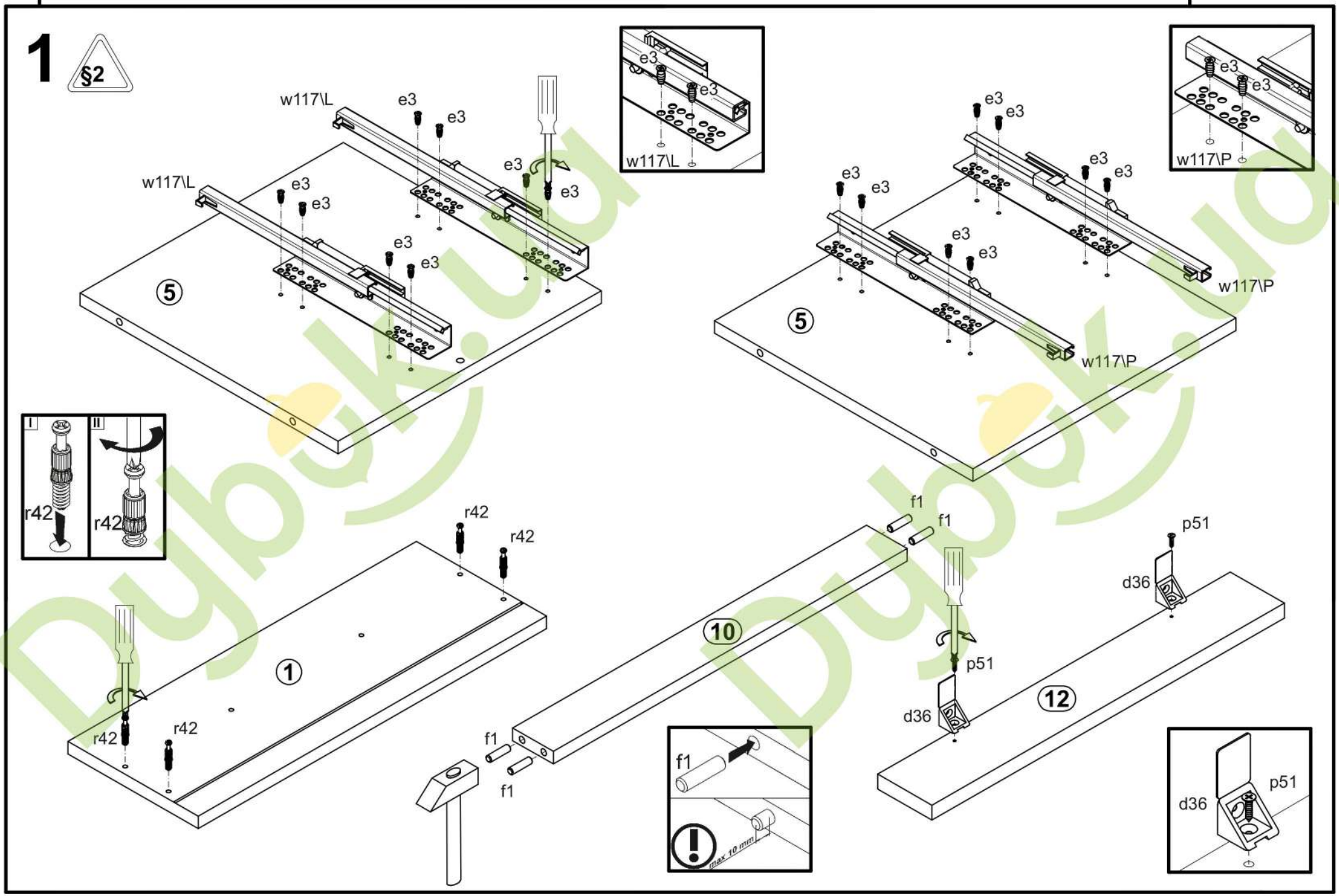

A S228-REG1W2S/20/7

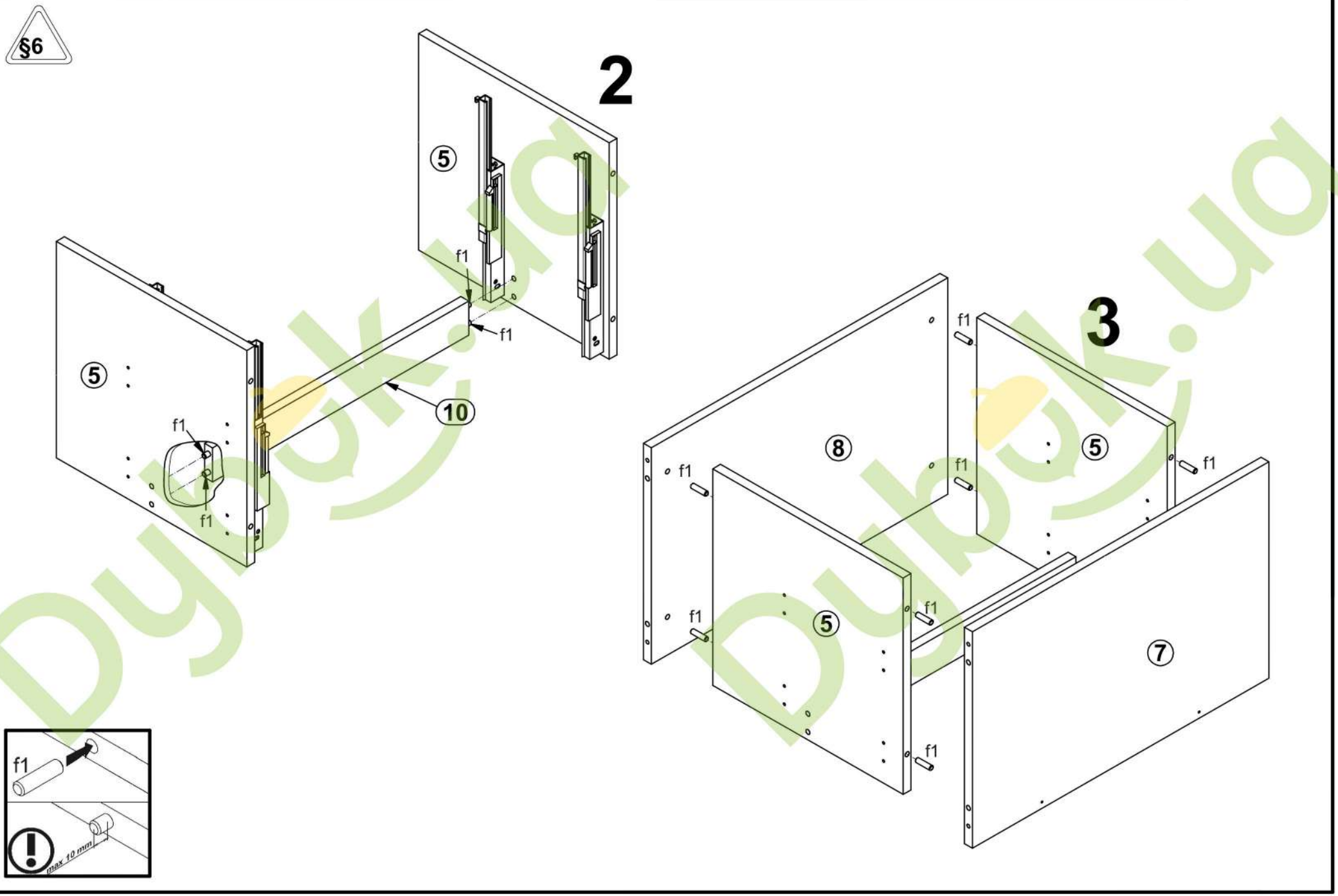

Dubok.ua

A

S228-REG1W2S/20/7

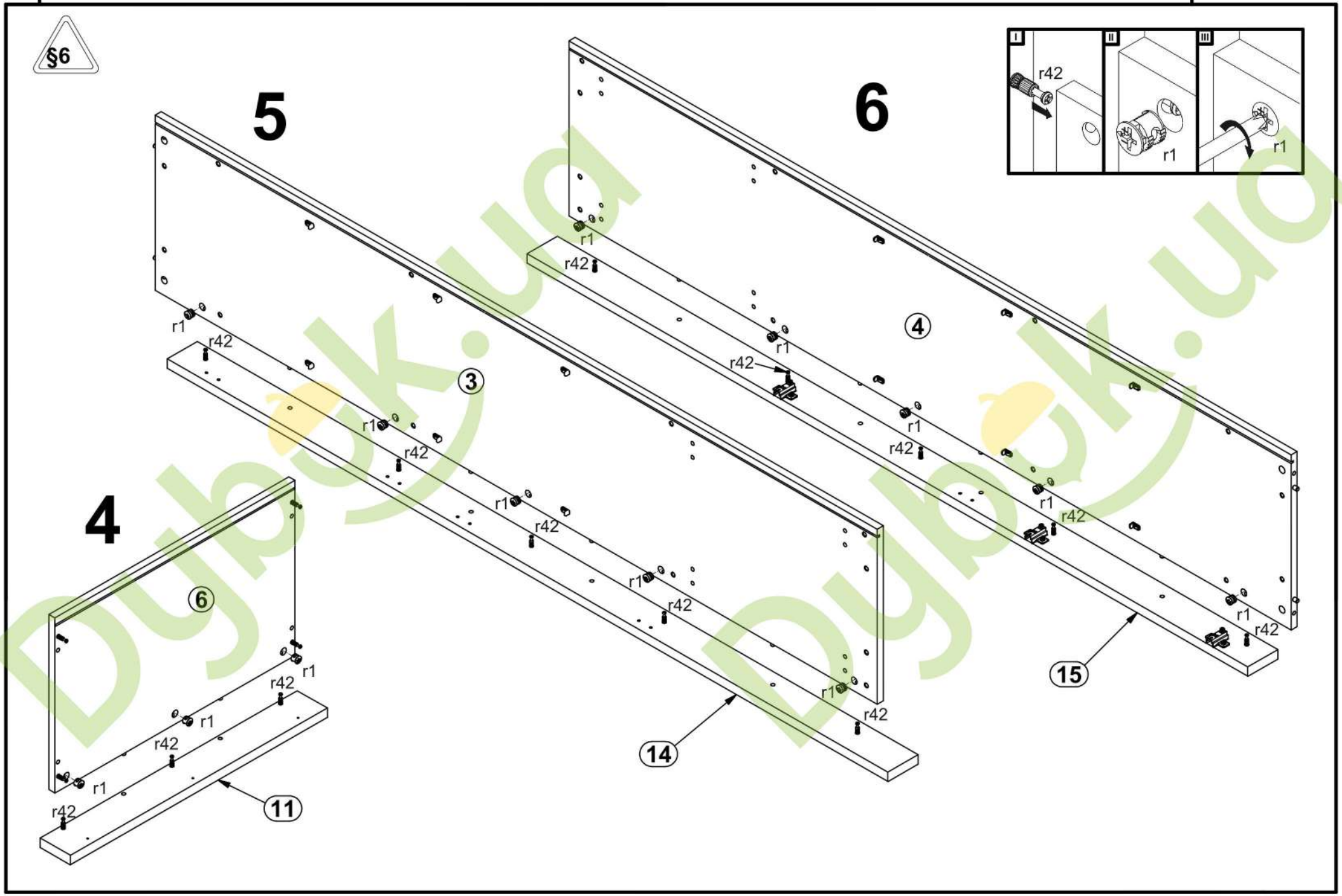

Dubok.ua

A

S228-REG1W2S/20/7

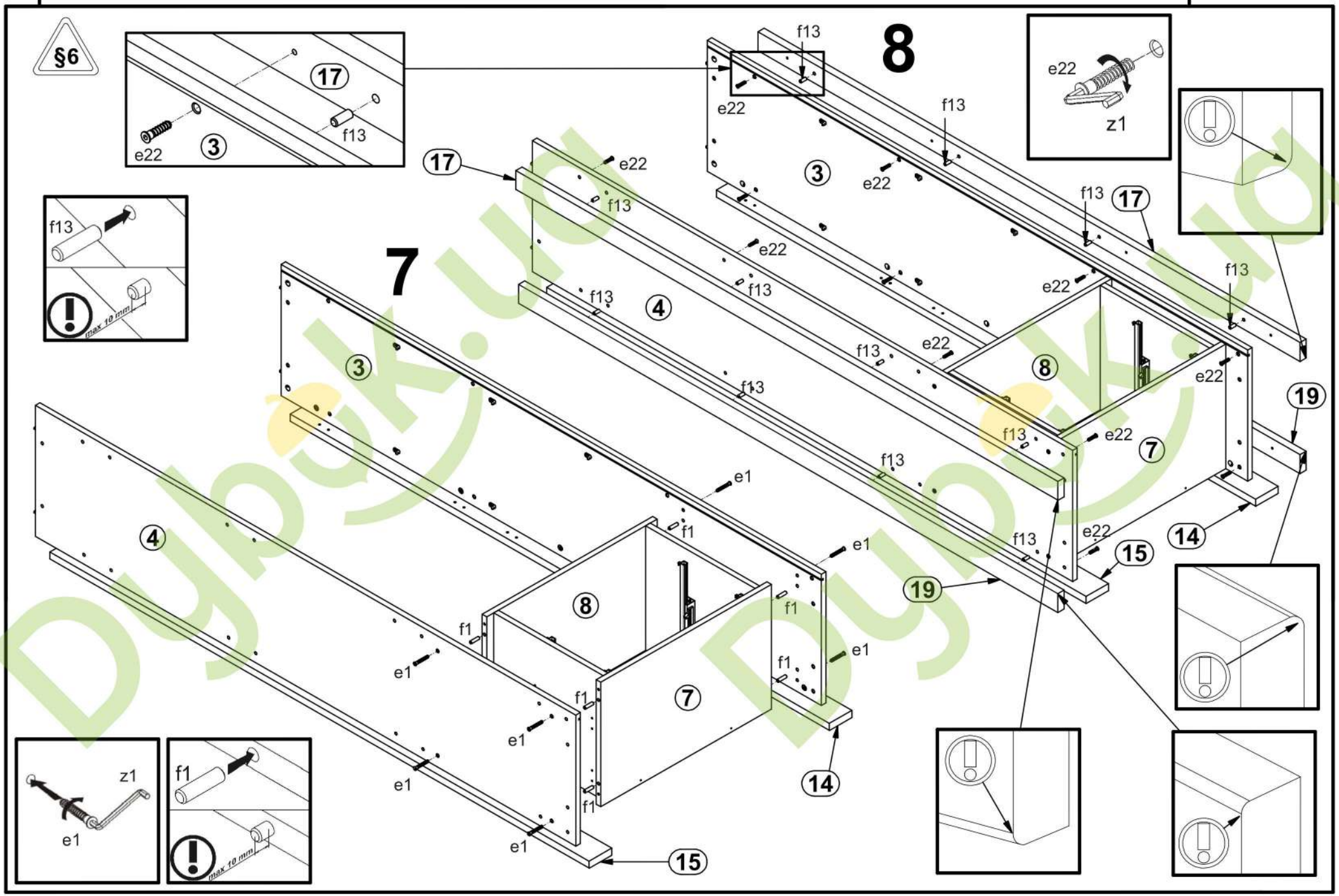

Dubek.ua

A

S228-REG1W2S/20/7

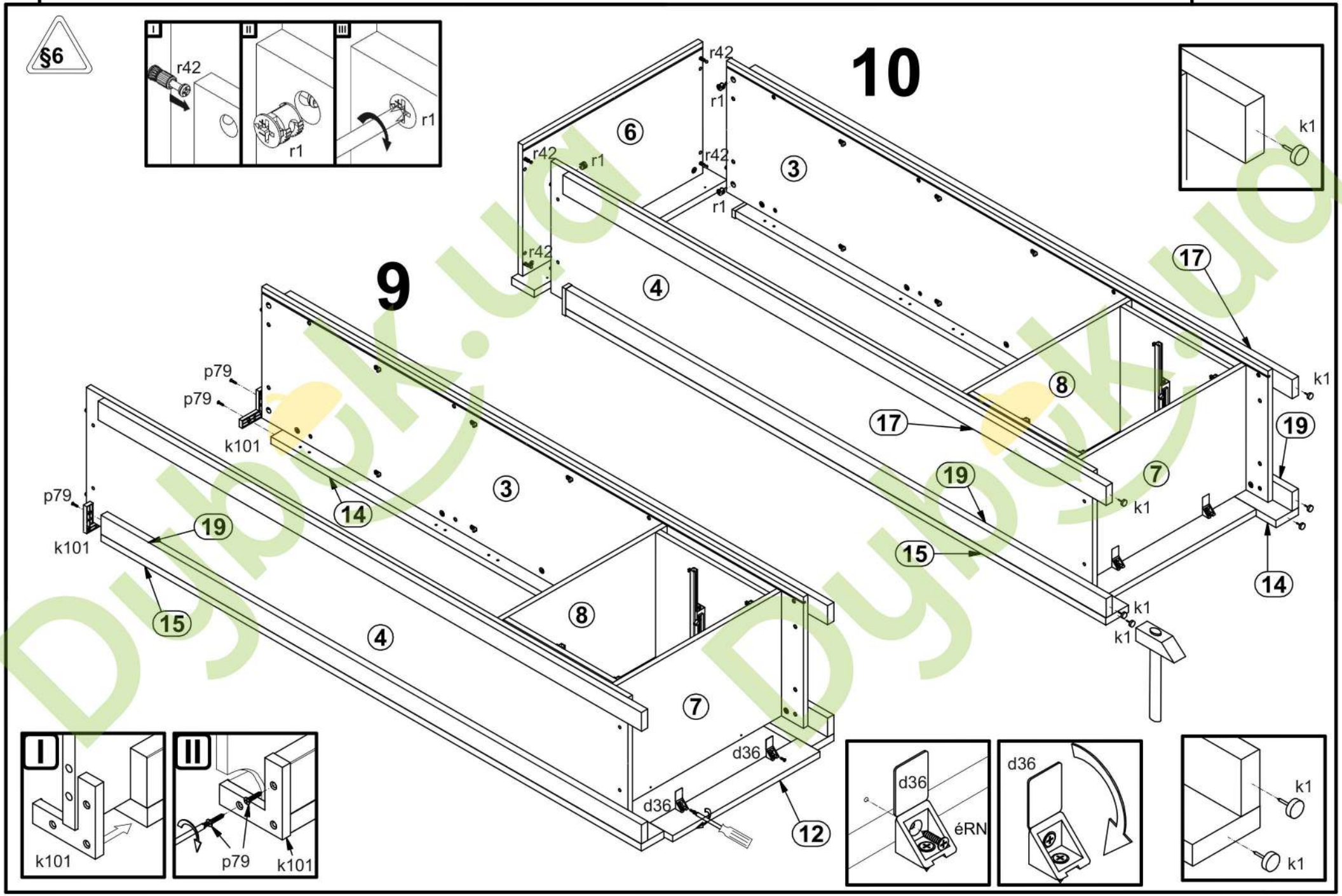

Dubok.ua

A

S228-REG1W2S/20/7

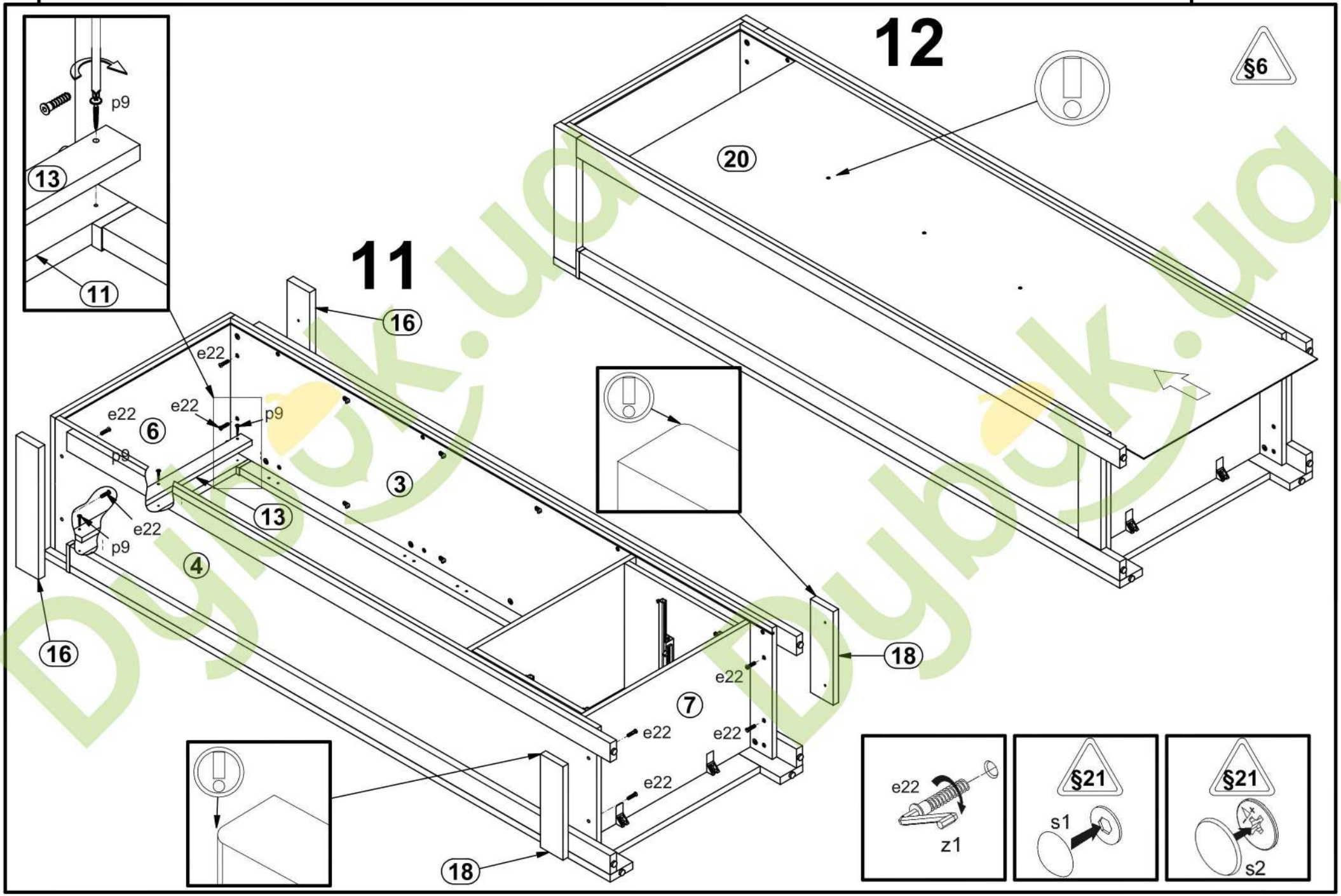

Dubok.ua

A S228-REG1W2S/20/7

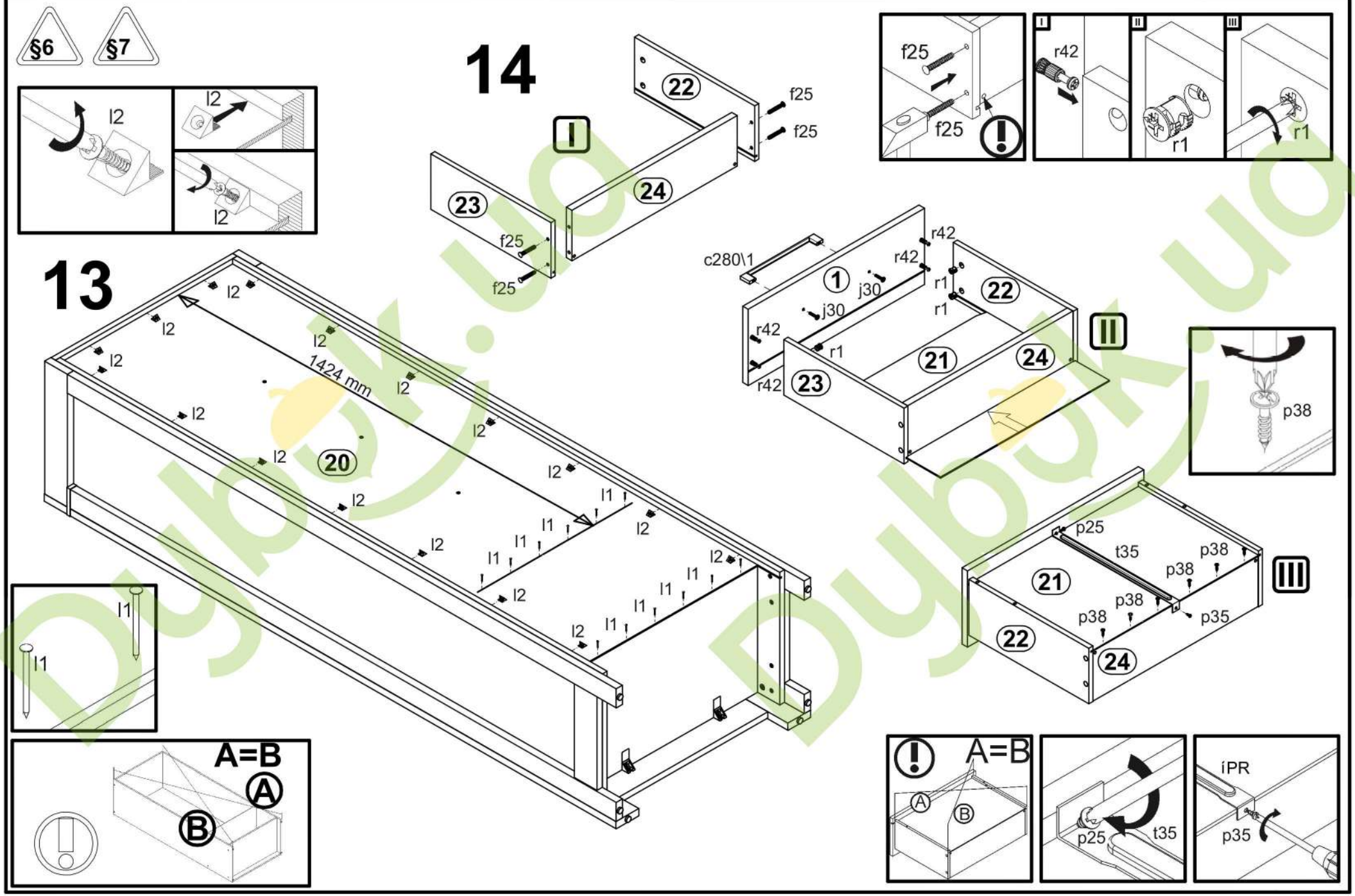

A S228-REG1W2S/20/7

